METRIC

MIL-STD-469A
2 December 1991
SUPERSEDING
MIL-STD-469
1 December 1966

MILITARY STANDARD

RADAR ENGINEERING DESIGN REQUIREMENTS, ELECTROMAGNETIC COMPATIBILITY

METRIC

AMSC N5088

AREA EMCS

DISTRIBUTION STATEMENT A. Approved for public release; distribution is unlimited.

CONTENTS

PARAGRAPH		PAGE
1.	SCOPE	1
1.1	Purpose	1
1.2	Application	1
2.	APPLICABLE DOCUMENTS	1
2.1	Government documents	1
2.1.1	Specifications, standards, and handbooks	1
2.2	Order of precedence	2
3.	DEFINITIONS	2
3.1	Definitions	2
3.1.1	Active spaceborne sensor	2
3.1.2	Circular aperture array	2
3.1.3	Planar phased array radar	2
3.1.4	Plane of reference	2
3.1.5	Receiver	2
3.1.6	Rectangular aperture array	2
3.1.7	Selectivity	3
3.1.8	Sensitivity	3
3.1.9	Signal processor	3
3.1.10	Signal substitution	3
3.1.11	Spacebased radiolocation system, class 1	3
3.1.12	Spacebased radiolocation system, class 2	3
3.1.13	Spurious emission, inband	3
3.1.14	Standard response	3
3.1.15	Standard test frequencies	3
3.1.16	Transmitter	3
3.1.17	Tunability	3
3.2	Symbols	4
4.	GENERAL REQUIREMENTS	8
4.1	Radar equipment and subsystems	8
4.1.1	Joint acquisitions	8
4.1.2	North Atlantic Treaty Organization (NATO) acquisitions	8
4.1.3	Self-compatibility	8
4.1.4	Radar spectrum management (RSM) control plan	8
4.1.5	Radar spectrum management (RSM) test plan	8
4.1.6	Testing requirements	8

CONTENTS

PARAGRAPH		PAGE
5.	DETAILED REQUIREMENTS	9
5.1	Scope	9
5.2	Application	10
5.2.1	Special application	11
5.2.2	Application determination	11
5.2.3	Test parameters	11
5.3	Transmitter limits	12
5.3.1	Transmitter emission bandwidth	12
5.3.2	Transmitter emission levels	12
5.3.3	Transmitter frequency tolerance	13
5.3.4	Transmitter tunability	13
5.3.5	Special KMC requirements, group D radars	16
5.4	Antenna limits	16
5.5	Receiver limits	16
5.5.1	Receiver acceptance bandwidth	16
5.5.2	Receiver susceptibility characteristics	16
5.5.3	Receiver tunability	16
5.5.4	Receiver frequency tolerance	18
5.5.5	Receiver oscillator radiation	18
6.	NOTES	20
6.1	Intended use	20
6.2	Issue	20
6.2.1	Issue of DODISS	20
6.3	Consideration of data requirements	20
6.4	International agreements	20
6.5	Subject term (key word) listing	21
6.6	Changes from previous issue	21

TABLES

I	Definitions of radar categories	9
II	Radar emission and susceptibility requirements summary	10
III	Transmitter emission bandwidth limits for $B_{-40\ dB}$	13
IV	Transmitter maximum emission levels outside $B_{-40\ dB}$ range	14

CONTENTS

TABLES PAGE

V	Frequency range for emission level requirements	15
VI	Frequency tolerance limits	15
VII	Antenna characteristics limits	17
VIII	Receiver acceptance bandwidth and susceptibility limits	18
IX	Receiver radiation limits	19
X	Test parameters and radar tuned frequencies	11

APPENDIX

PARAGRAPHS

10.	SCOPE AND APPLICATION	22
10.1	Scope	22
10.2	Application	22
20.	APPLICABLE DOCUMENTS	22
20.1	Government documents	22
20.1.1	Specifications, standards, and handbooks	22
30.	INSTRUMENTATION	23
40.	RADAR TRANSMITTER MEASUREMENTS	26
40.1	Requirements summary	26
40.2	Power output	26
40.2.1	Objective	26
40.2.2	Requirements	26
40.2.3	Application notes	26
40.2.4	Procedure	27
40.2.5	Sample calculations	28
40.3	Pulse width and rise time	29
40.3.1	Objective	29
40.3.2	Requirements	29
40.3.3	Application notes	30
40.3.4	Procedure	31
40.3.5	Sample calculation	31
40.4	Emission bandwidth	31
40.4.1	Objective	31

APPENDIX

PARAGRAPHS		PAGE
40.4.2	Requirements	32
40.4.3	Application notes	32
40.4.4	Procedure	33
40.4.5	Sampling calculations	35
40.5	Spurious emission	37
40.5.1	Objective	37
40.5.2	Requirements	37
40.5.3	Application notes	37
40.5.4	Procedures	38
40.5.5	Sample calculations	40
40.6	Frequency stability	41
40.6.1	Objective	41
40.6.2	Requirements	41
40.6.3	Application notes	41
40.6.4	Procedure	42
40.6.5	Sample calculations	42
40.7	Transmitter tunability	43
40.7.1	Objective	43
40.7.2	Requirements	43
40.7.3	Application notes	43
40.7.4	Procedure	43
40.7.5	Sample calculations	43
50.	RADAR ANTENNA MEASUREMENTS	43
50.1	Requirements summary	43
50.2	Antenna characteristics	43
50.2.1	Objective	44
50.2.2	Requirements	44
50.2.3	Application notes	44
50.2.4	Procedure	45
50.2.5	Sample calculations	47
60.	RADAR RECEIVER MEASUREMENTS	48
60.1	Requirements summary	48
60.2	Overall selectivity	48
60.2.1	Objective	48
60.2.2	Requirements	48
60.2.3	Application notes	48
60.2.4	Procedure	49
60.2.5	Sample calculations	50

APPENDIX

PARAGRAPHS

		PAGE
60.3	Spurious response	50
60.3.1	Objective	50
60.3.2	Requirements	50
60.3.3	Application notes	50
60.3.4	Procedure	51
60.3.5	Sample calculation	51
60.4	Receiver tunability and frequency stability	52
60.4.1	Objective	52
60.4.2	Requirements	52
60.4.3	Application notes	52
60.4.4	Procedure	53
60.4.5	Sample calculations	54
60.5	Receiver radiation	54
60.5.1	Objective	54
60.5.2	Requirements	55
60.5.3	Application notes	55
60.5.4	Procedure	55
60.5.5	Sample calculations	56

FIGURES

1.	Transmitter power output measurement block diagram	57
2.	Sample transmitter power output data form A	58
3.	Sample transmitter power output data form B	59
4.	Determination of t and t_r (pulse waveform)	60
5.	Transmitter pulse width, rise time and PRF measurement block diagram	61
6.	Sample transmitter pulse width data form A	62
7.	Sample transmitter pulse width data form B	63
8.	Sample transmitter pulse width or rise time data form	64
9.	Spectrum analyzer alpha factor (a) versus bandwidth (b) – pulse width (t) product	65
10.	Transmitter emission characteristics measurement block diagram	66
11.	Sample transmitter emission spectrum photograph data form	67
12.	Sample transmitter emission spectrum data form	68
13.	Illustration of emission spectrum photographs, overlap and analyzer bandwidth increased	69
14.	Sample transmitter closed system spurious emission data form A	70
15.	Sample transmitter closed system spurious emission data form B	71

APPENDIX

FIGURES **PAGE**

16. Sample transmitter closed system spurious emission data form C 72
17. Sample transmitter open field spurious emission data form A 73
18. Sample transmitter open field spurious emission data form B 74
19. Sample transmitter open field spurious emission data form C 75
20. Transmitter frequency stability measurement block diagram 76
21. Sample transmitter frequency stability data form A 77
22. Sample transmitter frequency stability data form B 78
23. Antenna pattern and median gain measurement block diagram 79
24. Sample antenna pattern data format (sample antenna pattern) 80
25. Receiver response characteristics measurement block diagram ≤ 10 GHz ... 81
26. Receiver response characteristics measurement block diagram > 10 GHz 82
27. Sample pulsed receiver data form 83
28. Sample nonpulsed receiver selectivity data form 84
29. Sample receiver selectivity data form A 85
30. Sample receiver selectivity data form B 86
31. Sample receiver spurious response data form A 87
32. Sample receiver spurious response data form B 88
33. Receiver tunability and frequency stability measurement block diagram 89
34. Sample receiver tunability and frequency data form 90
35. Sample receiver tunability data form 91
36. Sample frequency stability data form 92
37. Receiver oscillator radiation measurements block diagram 93
38. Sample receiver oscillator radiation data form B 94
39. Sample receiver oscillator radiation data form A 95
40. Sample power density measurements data sheet (directed beam antennas) ... 96

FOREWORD

1. This military standard is approved for use by all departments and agencies of the Department of Defense.

2. Beneficial comments (recommendations, additions, deletions) and any pertinent data which may be of use in improving this document should be addressed to: Commander, Naval Sea Systems Command, SEA 55Z3, Department of the Navy, Washington, DC 20362-5101 by using the self-addressed Standardization Document Improvement Proposal (DD Form 1426) appearing at the end of this document or by letter.

3. The expanding application of radar for various military functions and purposes places increased demands upon the occupancy of the electromagnetic spectrum. Control of the electromagnetic emission and susceptibility characteristics of radar equipment and systems is essential for conserving the limited electromagnetic (EM) spectrum that is available. The engineering design criteria set forth in this document are considered necessary for EM spectrum conservation and to ensure that the accommodation of military radars during peacetime/contingency and wartime situations will be compatible with all intended operational electromagnetic environments to the maximum extent possible.

4. The design requirements and criteria stated herein are not intended to prohibit or inhibit the free and unrestricted research in the development of new radar systems which promise an increase in effectiveness. The minimum design requirements given herein satisfy the Radar Spectrum Engineering Criteria; Section 5.3 in the National Telecommunications and Information Administration (NTIA) Manual of Regulations and Procedures for Federal Radio Frequency Management. The NTIA standards are approved for use by agencies and establishments of the Federal Government and constitute the minimum acceptable standards for electromagnetic spectrum management. Design requirements more stringent than the NTIA standards are provided herein for radar equipment and systems that operate in critical electromagnetic environments. When these situations exist, the intent of the requirements shall be applied with best engineering judgement and with the approval of the contracting activity.

1. SCOPE

1.1 Scope. This standard establishes the engineering design requirements to control the electromagnetic emission and susceptibility characteristics of all new military radar equipment and systems operating between 100 megahertz (MHz) and 100 gigahertz (GHz), to promote electromagnetic compatibility (EMC), and to conserve the frequency spectrum available to military radar systems.

1.2 Application. The design requirements presented herein apply to radar equipment and systems designed or acquired for use by activities and agencies of the Department of Defence (DOD). The applicable portions of this standard are mandatory for use by all departments and agencies of the Department of Defense unless waived by the cognizant project office with recommendation from appropriate EMC group. The applicability of the emission and susceptibility requirements are dependent upon the type of equipment or subsystem, its mission and intended installation. When engineering analyses on equipment or subsystems being acquired for use in specified systems or installations reveal that the requirements in this standard are not stringent enough for that acquisition, they may be tailored by the contracting activity and incorporated into the request-for-proposal, specification, contract or order. In cases where a system or integrating contractor is required to prepare a detailed equipment or subsystem specification containing requirements for electromagnetic compatibility including electromagnetic interference (EMI), electromagnetic pulse (EMP), electromagnetic radiation (EMR) hazards, and so forth, the requirements of this standard shall be tailored as needed to achieve overall required system or installation performance. In no case shall the tailored requirements be less stringent than those in the NTIA Manual of Regulations and Procedures for Federal Radio Frequency Management. For equipment and subsystems in feasibility or advanced development stages of the acquisition process, this standard shall be used as a guide in formulating the appropriate requirements. Those requirements shall be enumerated in the individual equipment development or purchase description.

2. APPLICABLE DOCUMENTS

2.1 Government documents.

2.1.1 Specifications, standards, and handbooks. The following specifications, standards, and handbooks form a part of this document to the extent specified herein. Unless otherwise specified, the issue of these documents are those listed in the issue of the Department of Defense Index of Specifications and Standards (DODISS) and supplement thereto, cited in the solicitation (see 6.2).

STANDARDS

MILITARY

MIL-STD-461	Electromagnetic Emission and Susceptibility Requirements for the Control of Electromagnetic Interference
MIL-STD-463	Definitions and System of Units, Electromagnetic Interference and Electromagnetic Compatibility Technology

HANDBOOK

MILITARY

MIL-HDBK-237 Electromagnetic Compatibility Management Guide for Platforms, Systems and Equipment

(Unless otherwise indicated, copies of federal and military specifications, standards, and handbooks are available from the Standardization Documents Order Desk, Building 4D, 700 Robbins Avenue, Philadelphia, PA 19111-5094.)

2.2 Order of precedence. In the event of a conflict between the text of this document and the references cited herein the text of this document takes precedence. Nothing in this document, however, supersedes applicable laws and regulations unless a specific exemption has been obtained.

3. DEFINITIONS

3.1 Definitions. The terms used in this standard are defined in MIL-STD-463. In addition, the following terms shall be defined as specified herein.

3.1.1 Active spaceborne sensor. Active spaceborne sensor is a measuring instrument in the Earth Exploration Service, or in the Space Research Service, by means of which physical measurements of various phenomena are obtained through transmission and reception of radio waves.

3.1.2 Circular aperture array. A circular aperture is defined as the shape of the array configuration of a planar-array antenna in which the elements are located within a circular area.

3.1.3 Planar phased array radar. A planar array is a phased-array antenna in which the array elements are in one plane.

3.1.4 Plane of reference. A plane of reference is a location in the rf transmission path, established as close to the antenna as is practicable, where the antenna transmission line is disconnected from the transmitter or receiver, when necessary, for insertion of couplers, adapters, or transitions to be connected to measurement instrumentation.

3.1.5 Receiver. A receiver is equipment necessary for receiving modulated radio-frequency signals and converting them in frequency or to a form that is suitable for signal processing, visual display, or audio presentation.

3.1.6 Rectangular aperture array. A rectangular aperture is defined as the shape of the array configuration of a planar-array antenna in which the elements are located within a rectangulary shaped area.

3.1.7 Selectivity. Selectivity is a measure of a receiver's ability to discriminate against signals on adjacent frequencies (usually expressed as a curve in which the input signal power at an adjacent frequency, relative to the on-tune power that produces the same response, is plotted against frequency).

3.1.8 Sensitivity. Sensitivity is the minimum input signal required to produce an output signal or indication that satisfies a specified requirement.

3.1.9 Signal processor. Signal processor is a device that processes the output signal of a receiver to utilize the information contained in the signal for such purposes as supplying tracking error signals, complex waveform decoding, automatic gain control (AGC) for its systems, target identification, electronic counter-countermeasures (ECCM), and clutter mapping.

3.1.10 Signal substitution. Signal substitution is a method of measuring signals by using a calibrated signal generator whose output is similar to that of the unknown signal and substitutes for the unknown signal to produce an identical response.

3.1.11 Spacebased radiolocation system, class 1. Spacebased radiolocation system, class 1, is a radiolocation system in space, the primary function of which is the detection and location of objects on or near the surface of the earth.

3.1.12 Spacebased radiolocation system, class 2. Spacebased radiolocation system, class 2, is a radiolocation system installed aboard a spacecraft for the purpose of determining the relative positions or velocities of one or more extravehicular objects.

3.1.13 Spurious emission, inband. A spurious emission inband is any spurious emission of a transmitter or system that is within the assigned frequency tuning range for the system.

3.1.14 Standard response. Standard response is a repeatable indication of radar operational performance (as specified in the radar system procurement specification) that is accessible through the receiver or signal processor for use in measurement of receiver selectivity or sensitivity.

3.1.15 Standard test frequencies. Standard test frequencies are that set of frequencies to which transmitters or receivers are tuned during the test procedures. At least three such frequencies exist in the tuning band designated for each equipment are located at the lower limit, center, and upper limit of the tuning range in each band, and designated to low (F_L), mean (F_M), and high (F_H), standard test frequencies, respectively.

3.1.16 Transmitter. A transmitter is equipment needed to generate a modulated radio-frequency signal and feed the modulated signal to an antenna for radiation into space as electromagnetic waves.

3.1.17 Tunability. Tunability is the ability of a radar system to perform its specified acquisition or tracking functions or both by maintaining adequate transmitter power output and receiver sensitivity over the designated tuning range.

3.2 Symbols. Symbols are defined as specified below:

A	Attenuation (dB)
ACF	Antenna coupling factors (dB)
AFC	Automatic frequency control
α	Alpha factor = pulse versus CW sensitivity of a receiver (dB)
α_R	Alpha factor for radar signal received (dB)
A_S	Attenuation of signal sampling device, main line to sample port, (dB)
B	Frequency bandwidth (MHz)
$B_{-(x)dB}$	Bandwidth at (−x) dB response level (MHz)
B_c	Bandwidth of the frequency deviation. (The total frequency shift during the pulse duration in MHz)
B_d	Bandwidth of the frequency deviation (peak difference between instantaneous frequency of the modulated wave and the carrier frequency) – (FM/CW radar systems), in MHz
B_{FSVM}	Frequency selective voltmeters bandwidth (MHz)
B_{NOM}	Nominal bandwidth (spectrum analyzer) at 3 dB points (Hz)
B_s	Maximum range over which the carrier frequency will be shifted for a frequency hopping radar (MHz)
BW	Bandwidth of test instrument (MHz)
CW	Continuous wave
d	Pulse compression ratio
dB	Decibels
dBm	Decibels referenced to one milliwatt
dBi	Decibels gain referenced to isotropic radiator
D	Antenna aperture dimension (meters)

erf	Error function
F_{co}	Waveguide cutoff frequency (MHz)
f_{lo}	Receiver local oscillator frequency (MHz)
f_{MOD}	Modulation rate (in frequency modulation) (MHz/sec)
f_N	Frequency separation between first null points, above and below f_o, in radar signal frequency spectrum (MHz)
F_H	High standard test frequency (MHz)
F_L	Low standard test frequency (MHz)
F_M	Mean standard test frequency (MHz)
FM	Frequency modulation
F_o	Radar fundamental frequency (MHz)
F_S	Sweep width (Hz)
FSVM	Frequency selective voltmeter receiver
G	Radar antenna main beam gain (dBi)
G_T	Transmit antenna gain (dBi)
G_R	Test antenna gain (dBi)
IF	Intermediate frequency (MHz)
k	Correction factor (dB)
λ	Wavelength (meters)
MPMVS	Mid pulse minimum visible signal (dBm)
MVS (MDS)	Minimum visible signal (minimum discernable signal) (dBm)
N	Number of subpulses within the radar total pulse output time (N =1 for non-FM and FM pulse radars)
N_e	Number of antenna elements (phased array)

P_{avg}	Radar average power output (peak power output x duty cycle) (dBm)
P_{ANT}	Power level at antenna terminals (dBm)
P_{CW}	CW signal level (dBm)
P_D	Power density at test antenna (dBm/m^2)
P_{DN}	Power density at one nautical mile (dBm/m^2)
P_{GEN}	Power output from signal generator (dBm)
PG	Processing gain (dB)
P_M	Power meter reading (dBm)
P_{MEAS}	Power (measured) (dBm)
P_P	Peak power output of radar (dBm)
P_{PULSE}	Pulsed rf signal level (dBm)
P_R	Power received at test antenna terminal (dBm)
PRF	Pulse repetition frequency (Hz)
P_S	Radar signal level (sampled) (dBm)
P_t	Maximum spectral level (dBm/kHz)
P_T	Peak power transmitted (dBm)
PW	Pulse width (μsec)
R	Distance, radar antenna to test antenna (meters)
R_{NM}	Distance (nautical miles)
SF	Pulse width of single step of frequency, (seconds)
t	Emitted pulse duration in seconds at 50 percent amplitude (voltage) points. For coded pulses, the pulse duration is the interval between 50 percent amplitude points of one chip (sub-pulse). The 100 percent amplitude is the nominal flat top level of the pulse.

T	Period between a given reference point on consecutive pulses (seconds)
T_a	Oscilloscope vertical display rise time (seconds)
t_{eff}	Effective pulse width (μsec)
t_f	Pulse fall time (90 percent amplitude to 10 percent amplitude, in μsec)
Θ_{3dB}	Antenna main lobe width at 3 dB points (degrees)
T_i	Rise time indicated on oscilloscope display (seconds)
T_O	Transmitter turn-on time (seconds)
T_S	Sweep time (seconds)
t_r	Emitted pulse rise time in microseconds (μsec) from the 10 percent to the 90 percent amplitude points on the loading edge. For coded pulses it is the rise time of a sub-pulse; if the sub-pulse rise time is not discernible, assume that it is 40 percent of the time to switch from one phase or sub-pulse to the next.
T_r	Response time of test receiver and recorder (milliseconds)
VSWR	Voltage standing-wave ratio
W	Rotational speed (r/min)
XPW	Expanded pulse width (pulse compression radars) (μsec).

4. GENERAL REQUIREMENTS

4.1 Radar equipment and subsystems. Radar equipment and subsystems acquisitions shall comply with the applicable requirements (see 4.1.1 through 4.1.6). These requirements shall be in addition to the applicable emission and susceptibility requirements and limits as specified in MIL-STD-461.

4.1.1 Joint acquisitions. Equipment or subsystems acquired by one DOD activity for multi-agency use shall comply with the requirements of the user agencies.

4.1.2 North Atlantic Treaty Organization (NATO) acquisitions. Equipment or subsystems acquired by a DOD activity in support of NATO shall comply with the applicable requirements of this standard and any applicable NATO standardization agreement (STANAG). The NATO STANAGs shall not be waived, deviated from, or tailored unless specific authority has been granted by the contracting activity.

4.1.3 Self-compatibility. The operational performance of a piece of equipment or subsystem shall not be degraded nor shall it malfunction when all of the units or devices in the equipment or subsystem are operating together at their designed levels of efficiency or normal design capability.

4.1.4 Radar spectrum management (RSM) control plan. The primary goal of this standard is to promote the effective conservation of the limited electromagnetic spectrum through enhanced EMC design of military radar systems. For this goal to be realized, careful attention to EMC is required in all phases of the design, development, and final production of a radar system (see 6.3).

4.1.5 Radar spectrum management (RSM) test plan. An RSM test plan shall be prepared (see 6.3).

4.1.6 Testing requirements. The testing requirements and procedures of this standard, as implemented by an approved EMC test plan, shall be used to determine compliance with the applicable emission and susceptibility requirements of section 5 (see 6.3). Data gathered as a result of performing tests in one electromagnetic discipline may satisfy requirements in another. To avoid unnecessary duplication, a single test program should be established with similar tests conducted concurrently whenever possible. Equipment intended to be operated as a subsystem shall be tested as such to the applicable emission and susceptibility requirements and limits whenever practical. Formal testing shall not commence without approval of the test plan by the Command or agency concerned.

5. DETAILED REQUIREMENTS

5.1 Scope. The radar categories and groups for the emission and susceptibility requirements established by this standard are defined in table I. All primary radars shall be classified in one of the four groups under one of the two categories in table I and shall meet the requirements specified for the classification category and group. Emission and susceptibility requirements for radars defined as group A in each category have not been established. Table II shall be the reference index for individual parameters under the emission and susceptibility requirements.

TABLE I. *Definitions of radar categories.*

Radar category	Group	Description
1	A[1]	Pulsed radars of 1 kW or less rated peak power; or radars with an operating frequency above 40 GHz; or man-portable[2] radars; or man-transportable[3] radars; or radio navigation[4] radar in the band of 9300 to 9500 MHz; or expendable, nonrecoverable radars on missiles.
	B	Radars having a rated peak power of more than 1 kW but not more than 100 kW and operating between 2900 MHz and 40 GHZ
	C	Radars operating below 40 GHz not included in groups A, B, or D
	D	All fixed radars in the 2700 to 2900 MHz band
2	A[1]	Pulsed radars of 1 kW or less rated peak power; or radars with an operating frequency above 100 GHz; or man-portable[2] radars; or man-transportable[3] radars
	B	Radars having a rated peak power of more than 1 kW but not more than 100 kW and operating between 2900 MHz and 100 GHz
	C	Radars operating below 100 GHz not included in groups A, B, or D
	D	All fixed radars in the 2700 to 2900 MHz band

[1]Presently exempt from any requirements specified herein.
[2]Man-portable: Items which are designed to be carried as a component part of individual, crew-served, or team equipment in conjunction with assigned duties. Upper weight limit is approximately 30 pounds per individual.
[3]Man-transportable: Items which are usually transported on wheeled, tracked, or air vehicles but have integral provisions to allow periodic handling by one or more individuals for limited distances, that is, 100 to 500 meters. Upper weight limits; approximately 65 pounds per individual.
[4]See 5.2.1.

TABLE II. *Radar emission and susceptibility requirements summary.*

Parameters	Paragraph	Table
Transmitter		
Emission characteristics:		
Maximum bandwidth, −40 dB	5.3.1	III
Maximum levels (beyond $B_{-40\ dB}$)	5.3.2	IV
Frequency range	–	V
Frequency tolerance	5.3.3	VI
System tunability	5.3.4	–
Special EMC requirements (Group D)	5.3.5	–
Antenna		
Antenna pattern and gain characteristics	5.4	VII
Receiver		
Acceptance bandwidth	5.5.1	VIII
Susceptibility characteristics	5.5.2	VIII
Tunability	5.5.3	–
Frequency tolerance	5.5.4	VI
Oscillator radiation	5.5.5	IX

5.2 Application. Category 1 of table I provides the minimum radar engineering design criteria that are acceptable for radars within the Federal Government. The Category 2 requirements exceed those in Category 1. Category 2 requirements shall be applied for radars operating in critical EMC environments such as aboard surface ships. Determination of the radar category is the responsibility of the program manager. The decision shall be made in the process of tailoring of standards on the basis of mission requirements, including the intended electromagnetic operational environment. MIL-HDBK-237 shall be used as a guide in the determination of radar categories and tailoring of specific criteria within categories. In no case shall the tailored requirements be less stringent than those under category 1. For radars employing more than a single emitter (excluding planar phased array radars), variable PRF radars, radars for which requirements herein cannot be directly applied, special methods are necessary. Special methods shall be fully documented in both the test plan and test report and shall receive prior approval from the Command or agency concerned. Unless otherwise specified by the contracting activity, the requirements and limits specified herein shall be required for all new radar equipment and subsystems.

5.2.1 Special application. In the special case where government radio navigation radars operate in the shared government/non-government band 9300-9500 MHz, an acceptable degree of electromagnetic compatibility is deemed to be that degree of compatibility associated with the radar equipment commercially available to the non-government community of users. The vast preponderance of the use of this band by non-government domestic and foreign ships and aircraft creates a situation where relatively inexpensive commercial equipment is available "off the shelf" and at the same time equipment improvements which might be incorporated unilaterally by small numbers of government stations would have little effect on the band as a whole. Accordingly, government radio navigation radars to be operated in this band, having a rated peak power of 100 kW or less, are placed in group A with the understanding that government agencies would procure equipments that are acceptable for non-government use and that this exemption will be re-examined should the situation in this band change.

5.2.2 Application determination. The requirements under group B shall be applied to class 1 spacebased radar systems on a case by case basis as determined by the contracting activity. The requirements under group B or group C shall be determined by the contracting activity for application, on a case by case basis, to class 2 spacebased radar systems and active spacebourne sensors.

5.2.3 Test parameters. Radar equipment and systems shall be tested under operation at tuned frequencies as specified in table X.

TABLE X. *Test parameters and radar tuned frequencies.*

Test parameter	Radar tuned frequencies[1]
Transmitter	
Power output	F_L, F_M, F_H[2]
Pulse width and rise time	F_L, F_M, F_H
Emission bandwidth	F_L, F_M, F_H
Spurious emission	F_L, F_M, F_H
Frequency tolerance	F_L, F_M, F_H
Transmitter tunability	F_L, F_M, F_H[2]
Antenna	
Antenna gain sidelobe suppression	F_M
Receiver	
Overall selectivity	F_M
Spurious response	F_L, F_M, F_H
Tunability	F_L, F_M, F_H[2]
Frequency tolerance	F_L, F_M, F_H
Oscillator radiation	F_L, F_M, F_H[2]

See footnotes on following page.

[1]These radar tuned frequencies represent the minimum number to be used.

[2]In addition to F_L, F_M, and F_H, eight more radar tuned frequencies are required for Category 2 radars: four frequencies approximately evenly-spaced between F_L and F_M plus four frequencies approximately evenly-spaced between F_M and F_H.

[3]F_L = lowest frequency for operation in each band.
F_M = mean frequency for each operating band.
F_H = highest frequency for operation in each band.

5.3 Transmitter limits.

5.3.1 Transmitter emission bandwidth. The maximum emission bandwidth for radars at the antenna input shall not exceed the limits as specified in table III.

5.3.2 Transmitter emission levels. The transmitter maximum emission levels, outside the maximum emission bandwidth (B_{-40dB}) specified in 5.3.1, shall not exceed the values as specified in table IV. The F_{MIN} and F_{MAX} range over which the maximum emission level applies shall be as specified in table V. The value for P_t as specified in table IV shall be determined by applying the radar parameters using the following equation:

$$P_t = P_p + 20 \log [(N)(t)] + 10 \log (PRF) - PG - 90$$

where:

PG = 0, for non-FM, non-coded pulse radars
PG = 10 log(d), for FM pulse radars
PG = 10 log(N), for coded pulse radars.

TABLE III. *Transmitter emission bandwidth limits for $B_{-40\ dB}$*

Type of radar emission	Maximum $B_{-40\ dB}$ for Category 1 and 2 radars	
	Group B (MHz)	Groups C and D (MHz)
Pulse, non-FM	$7.6/(t_r t)^{1/2}$,[1,2]	$6.2/(t_r t)^{1/2}$,[1,2]
Pulse, FM	$7.6/(t_r t)^{1/2} + 2B_c$,[3]	$6.2/(t_r t)^{1/2} + 2B_c$,[3]
Pulse, frequency-hopping	$7.6/(t_r t)^{1/2} + 2B_c + B_s$,[4]	$6.2/(t_r t)^{1/2} + 2B_c + B_s$,[4]
CW	$0.0003\ F_o$	$0.0003\ F_o$
FM/CW	$0.0003\ F_o + 2B_d$	$0.0003\ F_o + 2B_d$

[1]Including spread spectrum or coded-pulse radars.

[2]Up to maximum of 64/t for group B and group C.

[3]For FM-pulse radars with pulse rise time of less than 0.1 microsecond, an operational justification for the short rise time shall be provided.

[4]For frequency-hopping radars; with pulse compression but with pulse rise time of less than 0.1 microsecond or without pulse compression but with pulse rise of less than 0.01 microsecond, an operational justification for the short rise time shall be provided. The radar spectrum shall not intrude into adjacent spectrum regions on the high or low side of the band, defined by B_s, more than would occur if the radar was fixed-tuned at carrier frequencies equivalent to the end values of B_s and was complying with the requirements for FM and non-FM pulse radars.

[5]If t_f is less than t_r, then $t_f t$ shall be used in place of $t_r t$.

5.3.3 Transmitter frequency tolerance. The maximum frequency tolerance for radar transmitters shall not exceed the limits as specified in table VI.

5.3.4 Transmitter tunability. The frequency tuning band of the radar shall be the band approved for the specified equipment by the Joint Frequency Panel, United States Communication Electronics Board and shall be specified in the contract or order. Each radar shall be tunable in an essentially continuous manner over the approved frequency band or over a band which is 10 percent of the mid-band frequency. Crystal controlled radars conform to this requirement if operation at any frequency across the band can be achieved with a crystal change. Radar systems under group D shall be tunable continuously over the entire 2700 to 2900 MHz band.

TABLE IV. *Transmitter maximum emission levels outside $B_{-40\ dB}$ range.*

1. Reference diagram:

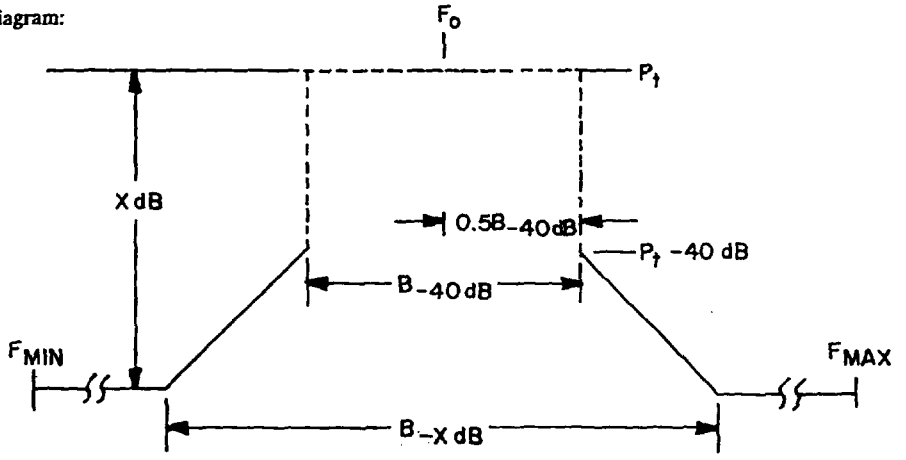

2. For Category 1 and 2 radars, the maximum level of emissions outside the B_{-xdB} frequency range and within the F_{MIN} to F_{MAX} frequency range shall be as follows:

   Groups B and C: $(P_t - 60)$ dBm/kHz or -30 dBm/kHz, whichever is less
   Group D: $(P_t - 80)$ dBm/kHz

3. The $B_{-x\ dB}$ range shall be obtained from the following relationships:

   Category 1; Groups B and C:

   $B_{-x\ dB} = 10^a\ (B_{-40\ dB})$; where $a = 1$ or $(P_t - 10)/20$, whichever is greater.
   $x\ dB = 60$ or $(P_t + 30)$, whichever is greater.

   Category 2; Groups B and C:

   $B_{-x\ dB} = 10^a\ (B_{-40\ dB})$; where $a = 2/3$ or $(P_t - 10)/30$, whichever is greater.
   $x\ dB = 60$ or $(P_t + 30)$, whichever is greater.

   Categories 1 and 2, Group D:

   $B_{-x\ dB} = 10\ (B_{-40\ dB})$, $x\ dB = 80$, special group D requirements are given in 5.3.5.

4. Emission levels at frequencies F within the regions where

   $0.5\ B_{-40\ dB} \leq \left| F - F_o \right| \leq 0.5\ B_{-x\ dB}$, shall be equal to or lower than the values obtained from the following equations:

   Category 1; Groups B and C:

   $$\text{Maximum emission level} = P_t - 40 - 20 \log \left| \frac{F - F_o}{0.5B_{-40\ dB}} \right|$$

   Category 2; Groups B and C:

   $$\text{Maximum emission level} = P_t - 40 - 30 \log \left| \frac{F - F_o}{0.5B_{-40\ dB}} \right|$$

   Categories 1 and 2; Groups D:

   $$\text{Maximum emission level} = P_t - 40 - 40 \log \left| \frac{F - F_o}{0.5B_{-40\ dB}} \right|$$

   Special group D requirements are given in 3.3.3.

5. F_{MIN} and F_{MAX} are defined in table V.

TABLE V. *Frequency range for emission level requirements.*

Radar tuned frequency (GHz)	Minimum test frequency (F_{MIN})		Maximum test frequency (F_{MAX})
	Waveguide (Select larger value)	Coaxial[1]	(Select larger value)
Categories 1 and 2, groups B, C, and D:			
Below 2	0.5 F_o or 0.9 F_{co}	0.5 F_o	10 F_o or 10 GHz
2 to 5	0.5 F_o or 0.9 F_{co}	0.5 F_o	5 F_o or 18 GHz
5 to 12	0.5 F_o or 0.9 F_{co}	0.5 F_o	4 F_o or 26.5 GHz
12 tp 18	0.5 F_o or 0.9 F_{co}	0.5 F_o	3 F_o or 40 GHz
18 to 40			2 F_o or 40 GHz
Category 2, groups B and C:			
40 to 100	0.5 F_o or 0.9 F_{co}	0.5 F_o	–[2]

[1]For transmitters employing frequency synthesis (mixers, multipliers, etc.) to generate F_o from base frequencies lower than 0.5 F_o, the minimum test frequency shall be extended to include the lowest base frequency.

[2]Frequency where emission level is (P_t − 60) or −30 dBm/kHz, whichever is lower. However, the frequency range covered shall include bands for satellite communications between 40 GHz and 100 GHz.

TABLE VI. *Frequency tolerance limits.*

Radar tuned frequency (MHz)	Maximum frequency tolerance (plus or minus parts per million)					
	Category 1			Category 2		Group D
				Groups B and C		
	Group A	Group C	Group D	Crystal[1]	Other	
Below 960	–	400	–	50	250	–
960 to 4,000	–	800	–	100	500	–
2,700 to 2,900	–	–	800	–	–	800
2,900 to 4,000	800	–	–	–	–	–
4,000 to 10,500	1,250	1,250	–	160	800	–
10,500 to 30,000	2,500	2,500	–	275	1,400	–
30,000 to 40,000	5,000	5,000	–	500	2,500	–
40,000 to 100,000	–	–	–	500	2,500	–

[1]Radars controlled by crystals or other precise methods of frequency control.

5.3.5 Special KMC requirements, group D radars. Radar systems in the2700 to 2900 MKs band (Category D) which operate in close proximity to other equipment is the band or operate in areas specified in Annex D of the NTIA Manual shall be designed and constructed to permit, without modification to the basic equipment, field incorporation of system electromagnetic compatibility provisions. These provisions include the requirement to meet specifications in accordance with a. and b. below and the recommendation to meet guidelines in accordance with c. below:

a. *Emission levels.* The radar emission levels at the antenna input shall be not greater than the values obtainable from the curves in table IV. At the frequency $B_{(-40\ dB)}/2$ displaced from F_o, the level shall be at least 40 dB below the maximum value. Beyond the frequencies $B_{(-40\ dB)}/2$ from F_o, the equipment shall have the capability to achieve at least the 80 dB per decade roll-off lines of table IV. The emission levels shall be below the appropriate dB per decade roll-off lines of table IV down to a −x dB level that is 80 dB below the maximum power density.

b. *Radar system PRF.* The radar system shall be designed to operate with an adjustable pulse repetition frequency(s). PRF(s), with a nominal difference of plus or minus 1 percent (minimum). This will permit the selection of PRF's to allow certain types of receiver interference suppression circuitry to be effective.

c. *Receiver interference suppression circuitry.* Radar systems in this band shall have provisions incorporated into the system to suppress pulsed interference. The following information is intended for use as an aid in the design and development of receiver signal processing circuitry or software to suppress ac pulsed interference. A description of the parametric range of the expected environmental signal characteristics at the receiver if output is:

Peak interference-to-noise ratio: $\leq$ 50 dB
Pulse width: 0.5 to 4.0 μsec
PRF: 100 to 2000 pps

5.4 Antenna limits. The radar antenna characteristics shall satisfy the requirements as specified in table VII.

5.5 Receiver limits.

5.5.1 Receiver acceptance bandwidth. The radar receiving system required acceptance bandwidths shall be as specified in table VIII.

5.5.2 Receiver susceptibility characteristics. The rejection of signals outside the required receiver acceptance bandwidth shall be equal to or greater than the values as specified in table VIII for the designated radar category and group.

5.5.3 Receiver tunability. The tunability of the radar receiver shall be commensurate with that of the associated radar transmitter. Requirements for radar transmitters shall be as specified (see 5.3.4).

TABLE VII. *Antenna characteristics limits.*

Category	Group	Requirements
1	B	No requirement is specified at the present time
1 2	C and D D	Antennas operated by their rotation through 360 degrees for the horizontal plane shall have a median gain[1] of −10 dBi or less, as measured on an antenna test range, in the principal horizontal plane. For all other antennas, suppression on lobes other than the antenna main beam shall be provided to the following levels, referred to the main beam: 1. First three sidelobes, 17 dB; 2. All other lobes, 26 dB.
2	B and C	For non-electronically steered antennas, the first major sidelobe shall be down at least 20 db from the main beam and all other lobes shall be down at least 30 db from the main beam. Additionally, antennas operated by their rotation through 360 degrees of the horizontal shall have a median gain[1] of −10 dBi or less, as measured on an antenna test range, in the principal horizontal plane. For electronically-steered antennas with the main beam positioned to the array normal and without adaptive features operating, the first major transmitter antenna sidelobes, relative to the main beam, shall be down at least 13 dB for rectangular aperture arrays and at least 17 dB for circular aperture arrays. The first major receiver antenna sidelobes shall be down at least 20 dB from the main beam. All other lobes beyond the first major sidelobe shall be down by 16 dB for rectangular aperture transmitter arrays, 24 dB for circular aperture transmitter arrays and 30 dB for receiver antenna arrays.

[1]Median gain is defined as that level over an angular region at which the probability is 0.5 that the observed or measured gain at any position of the antenna will be less than or equal to that level.

TABLE VIII. *Receiver acceptance bandwidth and susceptibility limits.*

Radar category	Group	Requirements
1	B, C, D	The overall receiver selectivity characteristics shall be more narrow than the transmitter bandwidth described in tables III, IV, and V for the respective group. The minimum frequency range over which the receiver acceptance bandwidth and susceptibility requirements apply shall be the F_{MIN} to F_{MAX} range in table V.
1	B	Receiver rejection of spurious responses, other than image responses, shall be 50 dB or better except where broadband front ends are required operationally.
1	C, D	Receivers shall be capable of switching bandwidth limits to appropriate values whenever the transmitter bandwidth is switched (pulse shape changed). Receiver image rejection shall be at least 50 dB; rejection of all other spurious responses shall be at least 60 dB.
2	B,C	The required acceptance bandwidth is the receiver acceptance bandwidth which includes the fundamental frequency response and extends from the lowest to the highest frequencies on the selectivity curve outside of which all other responses are at least 80 dB below the fundamental frequency response. Required acceptance bandwidths are listed: **Type modulation** — **Required acceptance bandwidth (MHz)** Non-FM pulse — 20/t FM pulse — 20d/t CW — $3 \times 10^{-4} F_o$ FM/CW — $3 \times 10^{-4} F_o + B_d$ The radar receiver shall not exhibit any undesired response when subjected to signals outside the acceptance bandwidth. RF preselection shall be employed except where broadband front ends are required operationally. The requirement for broadband front ends will be determined by the contracting activity and incorporated into the equipment or subsystem request-for-proposal, specification, contract, or order. The minimum frequency range over which the receiver susceptibility characteristics apply shall be the F_{MIN} to F_{MAX} range in table V for Category 2 radars.

5.5.4 Receiver frequency tolerance. The frequency stability of radar receivers shall be equal to or better than the frequency tolerance of the associated transmitter (see 5.3.3).

5.5.5 Receiver oscillator radiation. The radiation of signals produced within the radar receiver shall not exceed the limits as specified in table IX.

TABLE IX. *Receiver radiation limits.*

Category	Group	Requirements
1 2	B, C, D	a. The maximum radiation for both coaxial and waveguide systems shall be −40 dBm at the receiver input terminals. b. The frequency range for coaxial systems shall extend from 0.5 F (note 1) to and including F_{LO} with a maximum frequency of 40 GHz. c. The frequency range for waveguide systems shall extend from 0.5 F or 0.9 F_{CO}, whichever is greater, to and including $2F_{LO}$ with a maximum frequency of 40 GHz.
2	B, C	a. The maximum radiation from nonphased-array radars shall be −67 dBm at the receiver input terminals. b. For phased-array radars, the maximum radiation at the feed point of a discrete antenna element shall be −67 dBm. When the feed points to discrete antenna elements are not accessible, the radiated nonmain-lobe power density shall not exceed P_{DN} (see note 2). c. For radars employing coaxial transmission line and operating at frequencies $\leq$ 20 GHz, the receiver radiation limit applies over the frequency range of 0.5 F to and including $2F_{LO}$. For coaxial systems operating between 20 GHz and 100 GHz, the frequency range shall be from 0.5 F to and including F_{LO}. d. For radars employing waveguide and operating at frequencies $\leq$ 20 GHz, the receiver radiation limits apply over the range from 0.5 F or 0.9 F_{CO}, whichever is greater, to and including $2F_{LO}$. For waveguide systems operating between 20 GHz and 100 GHz, the frequency range shall be from 0.5 F or 0.9 F_{CO}, whichever is greater, to and including F_{LO}.

NOTES: 1. The value for F is determined as the lowest frequency used in developing the local oscillator frequency, F_{LO}.

2. The value for P_{DN}, in dBm/m^2, shall be determined from:

$$P_{DN} = -177 + 20 \log N_e - 20 \log R_{NM} \text{ or}$$

$$P_{DN} = -144 - 20 \log R_{NM}, \text{ whichever is less.}$$

The term N_e refers to the number of antenna elements and R_{NM} is the distance in nautical miles, to radar antenna.

6. NOTES

(This section contains information of a general or explanatory nature that may be helpful, but is not mandatory.)

6.1 Intended use. This standard is intended to establish the engineering design requirements to control the electromagnetic emission and susceptibility characteristics of new military radar equipment and systems within specified ranges, to promote electromagnetic compatibility, and to conserve the frequency spectrum available to radar systems.

6.2 Issue.

6.2.1 Issue of DODISS. When this standard is used in acquisition, the applicable issue of the DODISS must be cited in the solicitation (see 2.1.1).

6.3 Consideration of data requirements. The following data requirements should be considered when this standard is applied on a contract. The applicable Data Item Descriptions (DID's) should be reviewed in conjunction with the specific acquisition to ensure that only essential data are requested/provided and that the DID's are tailored to reflect the requirements of the specific acquisition. To ensure correct contractual application of the data requirements, a Contract Data Requirements List (DD Form 1423) must be prepared to obtain the data, except where DOD FAR Supplement 27.475-1 exempts the requirement for a DD Form 1423.

Reference Paragraph	DID Number	DID Title	Suggested Tailoring
4.1.4	DI-MISC-81114	Radar Spectrum Management Control Plan	–
4.1.5	DI-MISC-81113	Radar Spectrum Management Test Plan	–

The above DID's were those cleared as of the date of this standard. The current issue of DOD 5010.12-L, Acquisition Management Systems and Data Requirements Control List (AMSDL), must be researched to ensure that only current, cleared DID's are cited on the DD Form 1423.

6.4 International agreements. Certain provisions of this document are the subject of international standardization agreements (STANAGs –3516, 3614, and –3659). When change notice, revision, or cancellation of this document is proposed which will affect or violate the international agreement concerned, the preparing activity shall take appropriate reconciliation action through international standardization channels, including departmental standardization offices, if required.

6.5 Subject term (key word) listing.

Array
Attenuation
Bandwidth
Emission levels
Frequency
Planar phased array
Receiver
Spectrum
Waveguide

6.6 Changes from previous issue. Marginal notations are not used in this revision to identify changes with respect to the previous issue due to the extensiveness of the changes.

Custodians:
Army – ER
Navy – SH
Air Force – 99

Review activity:
Navy – EC

Preparing activity:
Navy – SH
(Project EMCS-0077)

APPENDIX A

MEASUREMENTS

10. SCOPE AND APPLICATION

10.1 Scope. Measurements described herein shall be performed using the procedures specified herein or by fully described and justified alternate procedures presented in the approved EMC test plan. This appendix is a mandatory part of this standard. The information contained herein is intended for compliance.

10.2 Application. The measured data obtained from applying the test procedures or the alternate procedures herein (see 10.1), shall provide the emission and susceptibility characteristics of the radar, referenced to the terminals of the radar antenna. The test procedures shall provide the antenna characteristics at a point which describes the far field radiation. The measurements of certain radar parameters provide data which are interrelated. The transmitter emission spectrum characteristics for a pulsed output, for example, are a function of power output, pulse width and pulse rise time parameters and to some extent, the frequency stability. The measurements of these interrelated parameters shall be made as close in time as practical.

20. APPLICABLE DOCUMENTS

20.1 Government documents.

20.1.1 Specifications, standards, and handbooks. The following specifications, standards, and handbooks form a part of this document to the extent specified herein. Unless otherwise specified, the issues of these documents are those listed in the issue of the Department of Defense Index of Specifications and Standards (DODISS) and supplement thereto, cited in the solicitation (see 6.2).

STANDARDS

MILITARY

MIL-STD-449	Radio Frequency Spectrum Characteristics, Measurement of
MIL-STD-810	Environmental Test Methods and Engineering Guidelines

(Unless otherwise indicated, copies of federal and military specifications, standards, and handbooks are available from the Standardization Documents Order Desk, Building 4D, 700 Robbins Avenue, Philadelphia, PA 19111-5094.)

30. INSTRUMENTATION

30.1 The test instrumentation required for measurement of specific equipment parameters is shown in the sample block diagram for individual test procedures. The test instrumentation shall be capable of producing the test results described for each test procedure. Detailed identification of all measurement and calibration instruments and calibration charts for all equipment used in the performance of these tests shall be provided in the measurement report.

30.2 The frequency of test signal generators shall be determined during the measurement procedures with a frequency meter or counter assuring the desired degree of accuracy. The signal generator output impedance shall be unbalanced 50 ohm, resistive, with a VSWR less than 1.3:1. For measurements where modulation or deviation is required, the percentage of modulation or deviation shall be known within 5 percent.

30.3 Signal generator outputs contain harmonics of the fundamental frequency. These harmonic outputs shall be attenuated in order that false receiver responses will not be produced. In particular, low pass or bandpass filters of known insertion loss at the fundamental frequency of the generator shall be used when spurious responses are being measured at frequencies well below the receiver tuned frequency. This technique is used to attenuate generator harmonics to levels below the sensitivity of the receiver.

30.4 Many signal generators exhibit some leakage that is particularly noticeable when the attenuator is near its maximum attenuation setting. Low-leakage signal generators shall be used to perform measurements; adequate shielding, separation and power line filtering shall be employed to eliminate the possibility of erroneous results caused by improper coupling of the signal generator. The signal generator leakage signal level shall be at least 6 dB below the indicated attenuator setting.

30.5 For receiver measurements, the receiver input coupler shall be a shielded network whose insertion loss is known to within 1 dB at the measurement frequency when it is terminated in its nominal impedance. The coupler input impedance shall properly terminate the signal source (VSWR less than 1.3:1) independent of load.

30.6 The frequency of signal generators supplying test signals shall be determined to an accuracy of plus or minus 2 parts in 10^6 unless other accuracy requirements are given in a specific test. The overall output calibration of the signal generator shall be correct within plus or minus 2 dB at any attenuator setting.

30.7 The calibration of attenuators external to signal generator shall be known within 1 dB at each measuring frequency when it is terminated in its nominal impedance. The attenuator shall have a VSWR less than 1.3:1 independent of load when driven by a 50 ohm source. The requirement of attenuator calibration may be waived if, in the calibration process, the attenuator insertion loss is included as part of the signal substitution source.

30.8 Frequency selective voltmeters shall be calibrated at two terminal voltmeters at all measurement frequencies by reference to standard signal generators. Frequency selective voltmeters used in these measurements shall be monitored by aural as well as visual indicators. An oscilloscope shall be used as a visual indication device to ensure that the frequency selective voltmeter indications are due to signals and not noise (especially applicable to pulse measurements).

30.9 When making measurements requiring recovery of pulse characteristics on non-pulse compression radars, the instrumentation 3 dB bandwidth in MHz shall be at least 2/t where t is the pulse width, in microseconds. For a pulse compression system, this bandwidth shall be at least 2d/XPW where d is the pulse compression ratio and XPW refers to the expanded pulse width.

30.10 Spectrum analyzers shall be calibrated to an amplitude accuracy of 2 dB.

30.11 When making measurements involving acquisition of fine grain spectrum details, the instrumentation 3 dB bandwidth in MHz shall be less than 1/10t or d/10XPW.

30.12 When making measurement involving recovery of the time waveform of a pulse signal, the instrumentation 3 dB bandwidth in MHz shall be greater than $3/t_r$ where t_r is the pulse rise time in microseconds. A measurement objective shall be a bandwidth of approximately $10/t_r$.

30.13 For transmitter testing a sampling device shall be used, where needed, to measure the output level of each signal component emitted. The coupling factor of the device shall be known within 1 dB at each measurement frequency. The requirement for sampling device calibration shall be waived if the device coupling loss is included when signal substituting for calibration levels.

30.14 Power meters used for measuring the sampled output from transmitters, measuring reference outputs from signal generators, and so forth, shall have a full scale accuracy within 5 percent of the indicated power.

30.15 Radar operation.

30.15.1 Condition for measurements. The equipment to be measured shall be set up so that it closely approximates the normal operating conditions. The steps specified in the operation and maintenance portions of the radar technical manual shall be performed prior to the measurements. The equipment shall be aligned in accordance with the pertinent instructions, such that it is represented under normal operating conditions, that is, not deliberately optimized at specific operating frequencies used in the measurements.

30.15.2 Radar tuned frequencies. Measurements shall be made with the radar tuned to each of the frequencies as specified in table X for the appropriate radar category. If the radar operates over more than one frequency band, that is, multiple bands, the criteria for selecting radar tuned frequencies shall be applied to each band.

30.16 Test sites.

30.16.1 Selection criteria. In the receiver measurements for both coaxial and waveguide systems, the test site shall normally be in the near vicinity of the radar system. This location provides for convenient injection of test signals and extraction of signal outputs during the measurement of receiver parameters. The transmitter requirements refer to the radar antenna terminals. Therefore, the measurement of transmitter signals shall be made as close as practical to the antenna terminals. The transmitter output test points shall be selected as the plane of reference for transmitter measurements in the following order of preference:

a. Closed system, system signal sampler at the antenna input

b. Closed system, test signal sampler inserted at the antenna input

c. Closed system, radar signal sampler or test signal sampler, located at or beyond the transmitter output and before the radar antenna input

d. Open-field reception of the radiated radar emission with a calibrated test antenna.

A near field antenna test range may be used in lieu of an open field test site for phased array antennas. The upper end of the test frequency range for closed system transmitter measurements will be limited by the characteristics of the device used to sample the radar output signal and by the characteristics of the transmission line between the sampling device and the radar antenna feed. Open field measurements shall be used for determining transmitter characteristics beyond the upper end of the range for closed system measurements. Antenna characteristics shall be measured from an open field test site. An anechoic chamber may be used in lieu of an open field test site, providing the chamber will approximate free space conditions over the range of measurement frequencies.

30.16.2 Closed system test sites. Receiver tests shall be made closed system. Transmitters using coaxial systems shall be made closed system up to the frequency where the device for sampling the radar signal cannot provide a reliable correlation of the measured data to radar antenna input levels. Transmitters using waveguide systems shall be tested up to the frequency where the device for sampling the in-guide signal fails to provide a reliable correlation of the measured data to the radar antenna input levels. The maximum frequency for making closed system measurements on radars employing waveguide transmission line shall be the cutoff frequency for the first higher order mode of propagation in the waveguide.

30.16.3 Open field test site. Radar emissions at frequencies exceeding the upper values specified (see 30.16.2) and radar antenna characteristics shall be measured in the open field or an anechoic chamber which approximates free space conditions. Unless otherwise specified, the minimum separation between the radar antenna and the test antenna at the open field site shall be D_1^2/λ or 3λ, whichever is larger, where D_1 is the maximum aperture dimension of the radar antenna and λ is the wavelength at the radar F_o. If the test antenna aperture (D_2) is larger than $D_1/10$, then the minimum radar antenna-to-test site separation shall be $(D_1 + D_2)^2/\lambda$. The expected power density

(P_D) at the test site shall be calculated using the equation:

$$P_D = P_T + G_T - (20 \log R) - 11.0$$

where R is the horizontal separation between the equipment antenna and the test antenna. The measured power density shall be no more than 2 dB below the calculated value. If the variation is greater than plus or minus 3 dB, tests shall not be continued without the approval of the contracting activity.

30.17 Radar receiver standard response. The standard response for pulsed receivers shall be the minimum visible signal (MVS) except for the overall selectivity test, where the standard response will be the mid-pulse minimum visible signal (MPMVS). The standard response will normally be measured at the receiver video output with a test oscilloscope. Where a particular piece of equipment or system (because of its unique configuration or type of modulation) cannot be measured in accordance with this definition, a different definition that is representative of the operational performance requirements of that equipment or system shall be designated and employed upon approval of the contracting activity's technical representative or other designated technical authority.

40. RADAR TRANSMITTER MEASUREMENTS

40.1 Requirements summary. The radar transmitter measurement and procedures described in this section provide data for comparison to emission characteristics, frequency tolerance and system tunability requirements and limits (see 5.3).

40.2 Power output.

40.2.1 Objective. The objective of this test is to determine the ability of a radar system to deliver the minimum rated power output over the approved frequency band.

40.2.2 Requirements. Radar systems shall produce the minimum rated power output when tuned over the approved frequency band.

40.2.3 Application notes.

40.2.3.1 The radar power output shall be measured with the radar tuned to each operating frequency as specified in table X.

40.2.3.2 For radar systems having multiple modulation modes or frequency bands, the power output measurements shall be performed for each mode and band combination. The transmitter frequency stability (see 40.6) and tunability (see 40.7) shall be performed at the same time as the power output tests.

40.2.3.3 For phased array systems with less than fifteen transmitters/tubes the power output of each transmitter/tube shall be measured. For phased array systems with fifteen or more transmitters/tubes, the power shall be either measured in the far-field or statistically determined by measuring the power outputs of a selected number of transmitters/tubes. The transmitters/tubes to be tested shall be determined using a table of random numbers for selection. Initially fifteen of the transmitters/tubes shall be selected for measurements purposes. The standard deviation of the measured data, corrected for any antenna amplitude weighting factor, shall be calculated. If the standard deviation is greater than 2.0 dB, additional transmitters/tubes shall be measured. The number of transmitters/tubes to be measured shall be determined using the student−t distribution. The mean of the measured data shall be calculated giving the power output per transmitter. The total power output shall then be the mean power output in watts, corrected for antenna weighting, times the total number of transmitters.

40.2.3.4 If the pulse shape of the transmitter output pulse is essentially rectangular, i.e., t_r and t_f are less than 0.lt, and the pulse width and PRF values are known or measured, the radar peak output shall be determined by measuring the average power output and converting the measured value to peak power output using the radar duty cycle factor.

40.2.3.5 If the radar modulation is complex, for example, the pulse width or PRF parameters are not easily determined, the radar peak power output shall be measured.

40.2.3.6 The test receiver for direct measurement of the radar peak power output shall be a frequency selective voltmeter (FSVM) or broadband crystal detector, depending upon the bandwidth required for reproducing the radar pulse envelope. The criteria for determining the bandwidth required is BW = 2/t.

40.2.4 Procedure. For the test setup block diagram, (see figure 1). The procedures for this test shall be as specified in 40.2.4.1 through 40.2.4.4.

40.2.4.1 The radar shall be tuned to one of the specified operating frequencies and adjusted for its normal operating conditions. Attenuators, if necessary, shall be connected to the signal sampler as shown (see figure 1).

40.2.4.2 For average power measurements, the power meter reading (P_M) shall be noted. Pulse width (t) and PRF measured values shall be obtained as described (see 40.3).

40.2.4.3 For peak power measurements with the FSVM as the test receiver, attenuation shall be inserted at the signal sampler to yield a peak level of minus 10 dBm or less at the FSVM input. After tuning the FSVM for maximum response, the meter reading shall be noted for reference. Tune the test signal generator to the FSVM frequency. With the test signal generator set for CW output, reference the output level (set for minus 10 dBm or less) to a selected value on the power meter. Set the test signal generator to pulsed output. The width of the output pulse shall be adjusted to the value obtained from the following equation:

PW_{TEST} = t; non-pulse compression radar

or

PW_{TEST} = XPW; pulse compression radar

Signal substitute the test signal generator to the FSVM input. The output level shall be adjusted to regain the reference FSVM reading obtained with the radar signal. Note the resulting level as P_{GEN}.

40.2.4.4 If the broadband crystal detector with oscilloscope is used for the test receiver, the attenuator at the signal sampler shall be adjusted to yield a level within the detector linear range. With the oscilloscope adjusted for a stable pulse display, note maximum display amplitude for reference. Adjust the test signal generator pulse width and reference the signal generator power level to the power meter as described for the measurements with the FSVM test receiver. Signal substitute the test signal generator output to the broadband crystal detector and adjust the output level to regain the reference oscilloscope display amplitude. Note the resulting level as P_{GEN}.

40.2.5 Sample calculations.

40.2.5.1 A sample calculation of the peak power output, using the measured average power, is as follows:

Measured data:

- Transmitter tuned frequency (F_o): 5000 MHz
- Pulse width (t): 1.3 microseconds
- PRF: 650 pps
- Power meter reading (P_M): −1.7 dBm
- Attenuation inserted (A_1): 0.0 dB
- Signal sampler coupling factor (A_S): 50.0 dB
- Transmission line attenuation, signal sampler to antenna (A_2): 1.0 dB

The average power output is calculated as follows:

$$P_{avg} = P_M + A_S + A_1 - A_2$$

$$= -1.7 \text{ dBm} + 50.0 \text{ dB} + 0.0 \text{ dB} - 1.0 \text{ dB}$$

$$= 47.3 \text{ dBm}$$

The peak power output (P_p, in dBm) is determined from the duty cycle (t)(PRF) using the following relationship:

$$P_p = P_{avg} + 60.0 + 10 \log \left[\frac{1}{(t)(PRF)} \right]$$

therefore,

$$P_p = 47.3 \text{ dBm} + 60.0 + 10 \log \left[\frac{1}{(1.3)(650)} \right]$$

$$= 47.3 \text{ dBm} + 30.7 \text{ dB}$$
$$= 78.0 \text{ dBm.}$$

40.2.5.2 A sample calculation of peak power output from measured peak power data follows:

Measured data:

- Transmitter frequency (F_o): 5000 MHz
- Signal generator substitution level (P_{GEN}): −11.0 dBm
- Attenuation inserted (A_1): 40.0 dB
- Signal sampler coupler factor (A_2): 50.0 dB
- Transmission line attenuation, signal sampler to antenna (A_2): 1.0 dB

The peak power output at the radar antenna is calculated as follows:

$$P_p = P_{GEN} + A_S + A_1 - A_2$$
$$= -11.0 \text{ dBm} + 50.0 \text{ dB} + 40.0 \text{ dB} - 1.0 \text{ dB}$$
$$= 78.0 \text{ dBm.}$$

40.2.5.3 Sample data forms for recording peak or average power output data are shown on figures 2 and 3.

40.3 Pulse width and rise time.

40.3.1 Objective. The objective of this test is to determine the amplitude versus time characteristics of the RF pulse at the transmitter output.

40.3.2 Requirements. This procedure shall be used to determine pulse width and rise time whenever those values must be experimentally determined for use in other tests required by this standard.

40.3.3 Application notes. The results from this test have a number of essential applications, as follows: (1) verifying that the pulse width is within specified equipment tolerances, (2) converting measured transmitter average power output levels to peak power output levels and (3) calculations which determine the radar emission bandwidth and emission level.

40.3.3.1 The pulse width test procedure shall include any measurements that are needed for determining the radar pulse envelope, in the time domain, at the radar output. The response of the test setup and any factors needed for relating the test point level to the antenna input level must be known.

40.3.3.2 The 3 dB bandwidth of the instrumentation used for recovering the time waveform of the pulse width and rise time shall be greater than $3/t_r$ where t_r is the pulse rise time. A measurement objective should be $10/t_r$.

40.3.3.3 The points used for determining the pulse width shall be as shown on figure 4. Rise time shall be determined from the 10 to 90 percent points, relative to the nominal flat top level.

40.3.3.4 The test oscilloscope is the basic instrument for measuring the amplitude versus time characteristics of the transmitter's pulsed emission. The test procedure consists of detecting the RF pulse with a crystal detector and measuring the resultant pulse envelope with the test oscilloscope. One advantage of this method is that the oscilloscope frequency response must accommodate only the video frequencies comprising the pulse envelope rather than frequency components in the vicinity of the transmitter fundamental. The disadvantages are that the detector input level should approach the upper end of the detector linear dynamic range and the detector conversion efficiency must be known or obtained through supplemental calibrations. If attenuators are necessary for reducing the signal level at the crystal detector input, the least attenuation that prevents detector overload and maintains the level within the linear range characteristic of the detector shall be used.

40.3.3.5 A typical block diagram of the test setup for pulse width and risetime measurements is shown on figure 5. When the crystal detector and oscilloscope are used for recovering the RF pulse the following precautions shall be observed:

a. The characteristic impedance of all interconnecting cables shall match the impedance of the devices being connected.

b. The test oscilloscope input shall be terminated to match the detector output and interconnecting cable impedance.

c. The bandwidth of the crystal detector system shall be greater than $3/t_r$, where t_r is the transmitter pulse rise time, with the transmitter fundamental as the mid-bandwidth frequency. The oscilloscope bandwidth shall be greater than $3/t_r$. A measurement objective for both the crystal detector system and test oscilloscope shall be a bandwidth of approximately $10/t_r$.

40.3.3.6 The linearity of the crystal detector or test oscilloscope assembly shall be checked to ensure adequate definition of the amplitude points where the level is 10 to 90 percent of the nominal flat top level. To perform this check, increase the attenuation inserted, in selected steps, and note the oscilloscope response obtained after each step. The data from the rise time tests shall provide definition of voltage points which are one-tenth of the nominal flat top level (see figure 4). The dynamic range of the test set up shall be at least 26 dB (1/20 voltage) below the nominal flat top level.

40.3.4 Procedure. The block diagram of the equipment setup shall be as shown on figure 5.

40.3.4.1 Pulse width measurements: Set the test oscilloscope for a direct current (dc) input and adjust the synchronization (trigger threshold) for a stable single pulse display. Set the oscilloscope sweep rate to the value that displays a complete pulse and covers as much calibrated horizontal scale as possible. The pulse envelope at the baseline shall cover at least 1/3 of the horizontal scale. Set the oscilloscope vertical sensitivity to obtain a pulse height which covers more than 1/3 of the calibrated vertical range to obtain good readability, then photograph the display.

40.3.4.2 Rise time measurement: Increase the sweep rate of the oscilloscope time base to display the rise time (10 to 90 percent point) over at least 1/3 of the oscilloscope horizontal width. Photograph the display and note oscilloscope control setting.

40.3.4.3 Pulse repetition frequency (PRF) measurements: Slow the test oscilloscope sweep rate until two pulses are seen on the display. Note the time (T), in seconds, between corresponding points on the two pulses. The radar PRF shall be calculated as PRF = 1/T. For radars having more than one interpulse period, each different interpulse time shall be measured.

40.3.5 Sample calculation.

40.3.5.1 The data in the rise time photographs shall be compared to the rise time capability of the test oscilloscope. The rise time of the test oscilloscope (T_a) shall be less than 1/3 times the indicated rise time shown in the photograph (T_i) i.e.:

$$T_a < 1/3\ t_i.$$

40.3.5.2 Sample data forms for pulse width, risetime, and PRF measurements are shown on figures 6 through 8.

40.4 Emission bandwidth.

40.4.1 Objective. The objective of this test is to determine the radar emission characteristics for comparison to the emission limits specified (see 5.3.1).

40.4.2 Requirements. The radar emission bandwidth at the B_{-40dB} points and over the rolloff region extending beyond each B_{-40dB} point shall not exceed the values as specified in table III and the emission limits as specified in table IV for the applicable radar category.

40.4.3 Application notes. The pulse width and rise time shall be measured for each transmitter modulation mode and tuned frequency used in the radar emission bandwidth test. For phased array systems with less than fifteen transmitters or tubes, the power output of each transmitter or tube shall be measured. For phased-array systems with fifteen or more transmitters or tubes, the power shall be either measured in the far-field or statistically determined by measuring the power outputs (corrected for any antenna weighing) of a selected number of transmitters or tubes. The transmitters or tubes to be tested shall be determined using a table of random numbers for selection. Initially, fifteen of the transmitters or tubes shall be selected for measurement purposes. The standard deviation of measured data shall be calculated. If the standard deviation is greater than 2.0 dB, additional transmitters or tubes shall be measured. The number of transmitters or tubes to be measured can be determined using the student-t distribution. The mean of the measured data shall be calculated giving the power output per transmitter or tube. The total power output is then the mean power output in watts, corrected for any antenna weighing, times the total number of transmitters or tubes. A power meter with a recorder output is desirable to permit recording a sample level of the transmitter power output providing a permanent record of any power fluctuation occurring during this test.

40.4.3.1 For certain radars such as frequency hopping or pulse compression radars, it may be necessary to supplement the data which shown the B_{-40dB} points on a single photograph with additional analyzer presentations in which the frequency sweep width is narrowed to show greater rolloff detail. The objective of this is to show the relationship between the 40 dB emission bandwidth frequencies and the lowest and highest transmit frequencies (frequency hopping radars) or the end points of the frequency deviation (pulse compression radars).

40.4.3.2 To obtain the power spectral level at the signal sampler (or antenna) output of a pulse type radar, it is essential to know the IF bandwidth of the spectrum analyzer. With all analyzer controls unchanged, connect the signal generator to the analyzer and tune it for a centered frequency display. With a CW output, determine the signal generator output level required for a mid-scale vertical display. Record this value as P_1. Repeat this procedure except with the signal generator output pulse-modulated with a 2.0 microseconds width at the radar PRF (pulse repetition frequency). Record this value as P_2. Calculate the alpha factor from the relationship, alpha factor (dB) = P_1(dBm) − P_2(dBm). Using the alpha factor, the bandwidth-pulsewidth (Bt) product is determined (see figure 9). The Bt product divided by 2×10^{-6} yields the analyzer IF bandwidth (B).

40.4.3.3 In the data reduction, the signal sampler coupler factor shall be required for converting the power spectral levels of the sampled signal into the equivalent levels at the radar antenna input. If the signal sampler is not located at the antenna input, the attenuation of the transmission line components between the sampler and the antenna shall be determined for use in the data reduction.

When emission spectrum data are obtained in the open field, the overall coupling from the radar antenna terminals to the test antenna terminals shall be required for application in the data reduction. The coupling factors and attenuation values shall be required over the entire frequency range covered by the emission spectrum measurements.

40.4.4 Procedure. For the test setup block diagram see figure 10. This test shall normally be performed as a closed system test in accordance with the test point selection priority list (see 30.16.1).

40.4.4.1 The test procedure for closed system measurements applies to open-field measurements except that the point of measurement shall be the test antenna terminals rather than signal sampler output. Therefore, the antenna-to-antenna coupler factor replaces the signal sampler coupling factor in the data reduction process. In either case, the radar signal level at the sample point is termed P_2.

40.4.4.2 If open-field measurements are necessary, the test antenna shall be located as described (see 50.2). With the radar antenna scan stopped, the alignment of the radar and test antenna shall be adjusted for maximum signal at the test antenna terminals. The test antenna polarization shall be the same as that of the radar antenna.

40.4.4.3 With the sample point connected to the spectrum analyzer through the appropriate transmission line and calibrated attenuators, the analyzer shall be tuned until the radar signal spectrum appears centered on the analyzer display. This adjustment is performed using the maximum analyzer bandwidth. The final analyzer bandwidth shall be selected using the following procedure:

a. Adjust external attenuators for an on-scale display.

b. Decrease the analyzer bandwidth in increments (a 1:3:10 sequence is normally available) and photograph the resulting displays.

c. Determine the maximum analyzer bandwidth for which the shape of the spectrum display (envelope) is independent of the bandwidth setting (i.e., no longer changes as bandwidth is reduced).

d. The analyzer bandwidth determined in c. shall be used for obtaining emission spectrum data (photographs) at the radar F_o and required points in the spectrum away from F_o (e.g. B_{-40dB}).

The analyzer IF bandwidth (3 dB) determined in c. shall satisfy the relationship $B_{NOM} > 1.7$ PRF for pulse radars. The analyzer controls and external attenuators shall be adjusted to provide the maximum amplitude on-scale display that does not result in overloading the analyzer input. The analyzer shall be checked for signal overload as follows. After the analyzer controls and external attenuators are set, a 10dB external attenuator shall be added at the analyzer input. The amplitude of the spectrum envelope shall decrease by a corresponding 10dB over all parts of the display. If a 10dB decrease is not noted, the analyzer controls and external attenuators shall be changed as required to produce the desired 10dB decrease when the overload check is performed. After verifying that overload is not occurring, the 10dB attenuator added for the check shall be removed.

40.4.4.4 The analyzer sweep width shall be adjusted for an optimum display showing the first null points on each side of the maximum emission at F_o. The sweep time shall be selected to satisfy the following inequality:

$$(B_{NOM})^2(T_s/F_s)>5$$

where:

B_{NOM} = spectrum analyzer IF bandwidth (3 dB), hertz
T_s = sweep time, seconds
F_s = sweep width, hertz.

Other controls shall be set in accordance with the analyzer operating manual, the control settings recorded, and then the display shall be photographed.

40.4.4.5 The analyzer display shall be calibrated as follow: Connect a calibrated CW signal generator to the spectrum analyzer, then tune it to the center of the analyzer display. Adjust the generator level to produce a display at the top horizontal graticule line. Record the signal generator frequency and output level. Adjust and record the generator level for each horizontal line. Tune the signal generator frequency so that the display is coincident with the right-hand end of the analyzer display. Increase or decrease the signal generator output as required to attain a display at the middle horizontal graticule line. Note the generator output level and frequency at this point, then tune the generator to the left-hand end of the display and repeat the process. If the levels at the analyzer display end points differ by greater than 2 dB from the mid-frequency level, select additional points across the display frequency range as necessary to describe the overall linearity characteristics.

40.4.4.6 The test setup shall be reconnected to the radar signal sample point. The analyzer sweep width shall be increased for an optimum display of the radar emission at the 40 dB points below the maximum level at F_o. The analyzer sweep rate shall be changed as necessary to satisfy the $(B_{NOM})^2(T_s/F_s)>5$ requirement. The display shall be photographed and the calibration procedure performed as described for the first photograph.

40.4.4.7 The next part of the procedure requires a tunable preselector which tracks with the sweep frequency of the spectrum analyzer inserted at the analyzer input. After reconnecting the test setup to the radar signal sample point, the spectrum analyzer shall be tuned above the radar F_o until the 40 dB down amplitude point appears near the low frequency end of the display. Remove part of the calibrated input attenuation to raise the entire spectrum display higher on the analyzer screen. In removing the attenuation, the level applied to the preselector and analyzer shall be maintained below the value which produces overload or signal compression in the display. The amplitude of the overall spectrum envelope, at the minus 40 dB amplitude and lower, shall be raised on the display by an amount equal to the attenuation removed. The level at the minus 40 dB amplitude point shall remain on scale. The analyzer sweep width which will show the upper end-point of the spectrum rolloff region shall be selected. The analyzer sweep rate shall be adjusted to satisfy the criteria given

for the first two photographs. The display shall be photographed and calibrated using the procedure given for the first photograph. The procedure described shall be repeated with the spectrum analyzer tuned below the radar F_o.

40.4.4.8 The procedure for CW and FM/CW radars is similar to that for pulsed radars described above except that it shall not be necessary to determine the alpha factor and the criteria for selecting the analyzer bandwidth shall be as follows:

a. For a CW radar, select the analyzer IF bandwidth (B) such that $B < 3(10^{-5})F_o$ where F_o is the radar tuned frequency, in hertz.

b. For FM/CW radars, select the analyzer IF bandwidth (B) such that $B < 3(10^{-5})F_o$ or $B < 0.5\ F_{MOD}$, whichever is less. F_{MOD} is the modulation rate for the FM.

For non-pulse radars, the tracking preselector can be replaced with a passive rejection filter, tuned to the radar F_o, when measuring emission levels in the rolloff region.

40.4.4.9 For phased array systems, procedures shall be repeated (see 40.4.4 through 40.4.4.8) with the system operating in its normal search mode.

40.4.5 Sampling calculations. The emission spectrum measurement results consist of the emission spectrum photographs and the associated frequency and amplitude calibration data together with insertion loss, coupling factor, and other calibrations as needed to obtain the power spectral level, in dBm/kHz, at the input to the radar antenna. Sample emission spectrum data forms are shown (see figures 11 through 13). Data reduction shall be required to yield a direct comparison of the radar performance to the specification limits.

40.4.5.1 Sample calculations which obtain the power spectral level in dBm/kHz from the measured data shall follow. Calculations are based on pulse radar having the measured characteristics, listed below, and a nearly rectangular RF pulse envelope. Other conditions are that there are no sub-pulses within the pulse, and that the pulses are not FM or otherwise encoded.

Measured data at transmitter F_o:

- Transmitter tuned frequency (F_o): 5000 MHz
- Frequency separation, first spectrum nulls (from photo): 1.54 MHz
- Radar PRF: 650 pps
- Spectrum analyzer alpha factor, −20.0 dB (2×10^{-6} microsecond pulsewidth)
- Measured signal sampler coupling factor (A_s): 50.0 dB
- Attenuation inserted at analyzer input (A_1): 30.0 dB
- Signal generator CW calibration level (P_{cw}) at emission spectrum peak: −24.7 dBm (A_1 removed)
- Attenuation, signal sampler to radar antenna (A_2): 0 dB.

40.4.5.2 The first step in the data reduction calculates the spectrum analyzer IF bandwidth B from the measurement with the 2 microsecond test pulsewidth described (see 40.4.3.2). An alpha factor of minus 20 dB provides Bt = 0.067 (see figure 9). Therefore, $(B)(2 \times 10^{-6}) = 0.067$ which gives B = 33.5 kHz.

40.4.5.3 The effective radar pulsewidth (t_{eff}) is determined from the equation $t_{eff} = 2/f_N$, where f_N is the frequency between the upper and lower first null points of the emission spectrum. Where $f_N = 1.545$ MHz,

$$t_{eff} = 2/(1.54 \times 10^6 = (1.3 \times 10^{-6}) \text{ seconds.}$$

40.4.5.4 With the spectrum analyzer bandwidth and the effective radar pulsewidth known, the product is:

$$Bt_{eff} = (33.5 \times 10^3)\,(1.3 \times 10^{-6}) = 0.044.$$

Applying Bt_{eff} (see figure 10), the pulse versus CW sensitivity for the radar signal (alpha R) is −23.6 dB.

40.4.5.5 The peak level P_p of the radar emission at the radar antenna input is given by:

$$P_p = P_{CW} + A_1 + A_2 - A_2 - \text{alpha R.}$$

Substituting alpha R and the measured values for the remaining factors in the equation gives:

$$\begin{aligned} P_p &= -24.7 + 30.0 - 0.0 + 50.0 + 23.6 \\ &= 78.9 \text{ dBm.} \end{aligned}$$

40.4.5.6 The last step consists of calculating the maximum power spectral level (P_t), in dBm/kHz as follows:

$$P_t = P_p + 20 \log [(N)\,(t)] + 10 \log PRF - PG - 90$$

where:

P_t = maximum power spectral level, dBm/kHz
P_p = peak power, dBm
N = number of subpulses in the pulse
t = emitted pulse duration, microseconds
PRF = pulse repetition frequency, Hz
PG = processing gain.

The conditions for this example are: (1) no subpulses contained in the pulse (N = 1), and (2) non-FM, non-encoded pulses (PG = 0). Therefore, the calculation of P_t gives:

$$P_t = 78.9 + 20 \log [(1)(1.3)] + 10 \log 650 - 0 - 90$$
$$= 19.3 \text{ dBm/kHz.}$$

The value for P_t is needed for evaluating the end points of the emissions levels in the rolloff region. The criteria for determining the dB below F_o level at the end point of each rolloff region is 60 dB or (P_t + 30) dB, whichever is greater. Evaluating (P_t + 30) dB gives 49.3 dB. Therefore, the 60 dB value applies to the radar in this example since (P_t + 30) is less than 60 dB.

40.5 Spurious emission.

40.5.1 Objective. The objective of this test is to measure the power spectral level of all emissions outside the B_{-40dB} frequency range; these emissions are not determined by the radar emission bandwidth test.

40.5.2 Requirements. Emissions outside the B_{-40dB} frequency range shall have a power spectral level below the maximum values (see 5.3.2).

40.5.3 Application notes. For groups B and C radars, this test defines the radar emissions characteristics down to levels 60 dB or P_t + 30)dB, whichever is greater, below the maximum emission level of the radar fundamental (F_o). For group D radars, the radar emission characteristics are defined down to levels 80 dB below the maximum F_o level. These regions above and below F_o are referenced herein as the rolloff frequency region. The spurious emission tests shall extend from the end points of the measured rolloff frequency regions to the limits of the applicable test frequency range specified (see table V). The test results shall provide the power spectral level, in dBm/kHz, referenced to the terminals of the radar antenna. The spurious emission test procedure shall be applied over those portions of the required test frequency range where the radar emission bandwidth test procedure has insufficient sensitivity to verify compliance with the dynamic range, 60 dB or (P_t + 30 dB below the maximum spectral level of F_o) over the specified test frequency range.

40.5.3.1 The spurious emission test shall be performed for each radar tuned frequency and operating mode specified for emission bandwidth tests (see 5.3.2).

40.5.3.2 The output power shall be measured using a thermal-type power meter and an appropriate signal sampler. The system directional coupler shall be used, if available, and shall be calibrated over the range of frequencies measured. For phased arrays the output power shall be measured as specified in 40.2.33. The number of transmitters selected shall be determined using a table of random numbers. Initially fifteen of the transmitters shall be selected for measurement purposes. The standard deviation of the measured data shall be calculated. If the standard deviation is greater than 2.0 dB, additional transmitters shall be measured. The number of transmitters to be measured can be determined using the student-t distribution. The mean of the measured data shall

be calculated giving the power output per transmitter. The total power output is then the mean power output in watts, corrected for any antenna weighing function times the total number of transmitters.

40.5.3.3 The first part of the spurious emission test procedure supplements the emission bandwidth, as necessary, for defining the power spectral level in the rolloff region. The procedure consists of increasing the spectrum analyzer IF bandwidth to capture more spectral power in frequency regions away from the radar fundamental but with a loss in the detail for the spectrum lobes. The result is an increase in the amplitude of the spectrum envelope relative to the analyzer noise level. A correction factor (k) shall be determined for relating the data measured with the increased analyzer IF bandwidth to the data from the radar emission bandwidth test.

40.5.3.4 The second part of the spurious emission test procedure shall be applied only when the spectrum analyzer, at maximum IF bandwidth, produces insufficient dynamic range in the measured data; that is, dynamic range is less than the 60 dB or $(30 + P_t)$ dB, whichever is required. The second part of the procedure shall be required for adequate measurement sensitivity between the end points of the spectrum rolloff regions and the limits of the required test frequency range. In the second part of the test procedure, the spectrum analyzer in the test setup shall be replaced with a tunable receiver (frequency selective RF voltmeter, FSVM). A correction factor (k) shall be used for relating the data measured with FSVM to radar emission bandwidth data.

40.5.3.5 The spurious emission test shall be performed for each radar transmitter tuned frequency and operational mode used in the emission spectrum test (see 40.4).

40.5.4 Procedures. Refer to procedures as shown on figure 10 for a typical block diagram of this test. Tune the radar transmitter to a standard test frequency and most used operating mode. Adjust the output power to the nominal level. Record the measured transmitter power at the start of this test and at intervals of 30 minutes or less (more frequently if a noticeable change occurs). A power meter with a recorder output is desirable to permit recording a sample level of the transmitter radiated power output providing a permanent record of any power fluctuations occurring during this test.

40.5.4.1 The procedure shall be described for spurious emissions above the radar tuned frequency (F_o). It shall be assumed that the radar emission bandwidth procedure has been completed to a frequency above F_o where the emission level is less than 5 dB above the spectrum analyzer noise level. The analyzer IF bandwidth shall be increased and the frequency sweep range shall be tuned for a spectrum display which overlaps the upper end of the sweep range of the previous spectrum photograph. The overlap region shall include amplitudes which are at least 15 dB above the analyzer noise presentation in the previous photograph. The results from the process of changing the bandwidth and overlapping sweep ranges shall be as shown on figure 13. Note the increase (k, in dB) of the spectrum envelope produced by increasing the analyzer IF bandwidth for identical frequency sectors. In the example as shown on figure 13, k equals 19.5 dB. Photograph the display and calibrate the analyzer frequency and amplitude scales using the procedure given (see 40.4.4.5).

40.5.4.2 When it is necessary to employ the second part of the spurious emission test procedure (where the FSVM replaces the spectrum analyzer), the process for obtaining the k factor shall be modified slightly. Using the radar emission bandwidth photograph which shows the rolloff spectrum region for reference, a frequency toward the end of the rolloff where the display amplitude is 10 to 15 dB above the noise shall be selected. The FSVM shall be tuned about this frequency for a maximum response, and the amplitude for reference noted. A calibrated pulsed RF signal shall be substituted at the input to the FSVM. The PRF of the pulsed RF signal shall be set to equal the radar PRF. The RF pulsewidth (t) shall be adjusted to satisfy the following:

$$t > 2/B_{FSVM}$$

where B_{FSVM} is the nominal instrument bandwidth. The frequency of the pulsed RF signal shall be adjusted for maximum response on the FSVM, then the signal level adjusted to obtain the reference FSVM response. The frequency of the pulsed RF signal shall be measured and the value along with the signal level noted. The CW signal level corresponding to the amplitude of the spectrum envelope shall be determined in the photograph at the frequency noted. The k factor, in dB, shall be determined by comparing the CW signal level (from the photograph), P_{CW}, to the pulsed RF signal level, P_{PULSE}, as follows:

$$k = P_{PULSE} - P_{CW}$$

where:

P_{PULSE} and P_{CW} are in dBm.

40.5.4.3 When spurious emissions, which are 20 dB or more above the test receiver noise level, are found the spectrum analyzer test receiver shall be used to determine the power spectral level. The analyzer bandwidth shall be returned to the original value used in the radar emission bandwidth test.

40.5.4.4 After the upper frequency limit has been reached (see table V), the analyzer shall be tuned to the frequency corresponding to the lower frequency of the maximum allowable emission bandwidth and the scan for spurious emission shall begin below the operating frequency. The entire scan shall be performed for each of the three standard test frequencies and at the maximum duty cycle. The same tests shall be performed at the mid-standard test frequency using the mean pulsewidth and repetition rate of the system.

40.5.4.5 Spurious emissions measurement test procedures in the open field shall be the same as those for the closed system tests except that additional measurements shall be made to determine the antenna coupling factor (ACF) from the terminals of the radar antenna to the terminals of the test antenna in the open field over the test frequency range. When the ACF coupling factor is known, it shall not be essential for the radar-to-test antenna distance to satisfy the minimum distance requirement given for the radar antenna pattern test. The polarization, bearing, and elevation of the radar and test antennas shall be adjusted for maximum signal transfer over each portion of the test frequency range.

40.5.4.6 For the antenna coupling measurement at each frequency, a calibrated CW signal shall be applied to the radar antenna input. The level received at the test antenna terminals shall be measured with the spectrum analyzer or FSVM. Signal substitution with a calibrated CW signal generator shall be used for determining reference response readings obtained on the analyzer or FSVM. When the antenna coupling is measured for radar antennas having waveguide transmission line input, adapters and transition sections shall be employed over appropriate portions of the measurement frequency range.

40.5.5 Sample calculations. The results from the spurious emission measurements will consist of spectrum analyzer photograph or FSVM readings with associated calibration data, measured k factors as necessary plus additional test data such as signal sampler or radar-to-test antenna coupling and insertion losses preceding the point for substituting the calibration signals. Sample spurious emission data forms are shown (see figures 14 through 19).

40.5.5.1 To determine the power spectral level in dBm/kHz from the measured data, use the following sample calculations as a guide:

Measured data at transmitter F_o (5000 MHz):

- Frequency separation, first spectrum nulls (from photo): 1.54 MHz
- Radar PRF: 650 pps
- Spectrum analyzer alpha factor for a 2-microsecond pulsewidth: −20.0 dB
- Measured signal sampler coupling factor (A_s): 50.0 dB
- Attenuation inserted at analyzer input (A_1): 30.0 dB
- Signal generator CW calibration level (P_{CW}) at emission spectrum peak: −24.7 dBm (A_1 removed)
- Attenuation, signal sampler to radar antenna (A_2): 0 dB
- Nominal spectrum analyzer IF bandwidth (B_{NOM}): 30 kHz.

First, apply the data analysis procedures given (see 40.4.5) to obtain the maximum spectral level at F_o which is 19.3 dBm/kHz. Next consider that the power spectral level at 40 MHz above F_o is desired but the spectrum envelope is only 4 dB above the noise level, which also increases when the bandwidth is changed. Assume that the k factor resulting from the change in bandwidth (see 40.5.4.1) is analyzed at 15 MHz above F_o (where the power spectral level is 35 dB below the maximum spectral level at F_o). With the following data obtained:

- Signal generator (SG) CW level (P_{CW}) at F_o (frequency of spectrum peak), A_1 removed and 30 kHz B_{NOM}: −24.7 dBm
- SG CW level ($P_{CW,A}$) at F_o + 15 MHz, A_1 removed and 30 kHz B_{NOM}: −59.7 dBm

- SG CW level ($P_{CW,B}$) at F_o + 15 MHz, A_1 removed and 100 kHz B_{NOM}: −49.2 dBm
- SG CW level ($P_{CW,C}$) at F_o + 40 MHz, A_1 removed and 100 kHz B_{NOM}: −58.5 dBm.

The k factor shall be determined as:

$$\begin{aligned} k &= P_{CW,A} - P_{CW,B} \\ &= -59.7 \text{ dBm} - (-49.2 \text{ dBm}) \\ &= -10.5 \text{ dB}. \end{aligned}$$

With the analyzer bandwidth of 100 kHz, the CW level at F_o + 40 MHz ($P_{CW,C}$) is measured −58.5 dBm. Adding the k factor to compensate for the increase of analyzer bandwidth, the equivalent CW level ($P_{CW,D}$) for B_{NOM} = 30 kHz is:

$$\begin{aligned} P_{CW,D} &= P_{CW,C} + k \\ &= -58.5 \text{ dBm} + (-10.5 \text{ dB}) \\ &= -69.0 \text{ dBm}. \end{aligned}$$

Comparing the resulting level to the CW level at the spectrum maximum obtains −24.7 dBm − (−69.0 dBm) = 44.3 dB below maximum power spectral level. The power spectral level at F_o was 19.3 dBm/kHz. Therefore, the power spectral level at F_o + 40 MHz is 19.3 dBm/kHz − 44.3 dB = −25.0 dBm/kHz.

40.6 Frequency stability.

40.6.1 Objective. The objective of this test shall be to determine the frequency stability of the radar transmitter.

40.6.2 Requirements. Radar transmitters shall achieve a frequency tolerance no larger than that given (see 5.3.3) for the appropriate radar category.

40.6.3 Application notes. This test shall be performed in-line using the system directional coupler or other suitable coupling devices. The radar transmitter shall be tuned to an operating frequency near the midpoint of the tuning band. If the radar system operates on more than one band, the tests shall be performed for each band. The preferred test technique shall be to automatically measure and record the frequency.

40.6.3.1 The transmitter output signal shall be obtained from the transmitter signal sampler or a test signal sampler inserted between the transmitter output and antenna input. Alternative test points between the transmitter frequency determining circuits and the final output shall be used providing that (1) the frequency at the point of measurement equals the final output frequency and (2) connection of the test instrumentation shall not alter the transmitter operation. The attenuators in the diagram shall be needed to reduce the signal levels to within the input level capabilities of the test instrumentation.

40.6.3.2 The test instrumentation shall provide a measurement accuracy which is equal to or better than 5 percent of the specified maximum frequency tolerance. For example, a group C, category 1, radar operating at 100 MHz would have a maximum tolerance of: $(400/10^6)$ $(100 \times 10^6$ Hz) = 0.04 MHz. For a measurement accuracy of 5 percent, the frequency shall be determined within 5 percent of 0.04 MHz = 2000 Hz or 20 parts per 10^6 at the operating frequency of 100 MHz.

40.6.3.3 The transmitter frequency stability shall be measured at the highest and lowest temperature for which the equipment is designed to operate. Temperatures should be established and maintained in accordance with procedures specified in MIL-STD-810, methods 501.1 and 502.1.

40.6.4 Procedure. The frequency stability measurement block diagram shall be as shown on figure 20. The test duration shall be a minimum of 4 hours with the following measurement intervals:

a. Within first hour: After transmitter turn-on, at time T_o, measure frequency at 10-second intervals during first 2 minutes of operation. Beginning at times of T_o + n minutes, where n = 5, 10, 15... up to 60, measure frequency at 10-second intervals for a period of 1 minute.

b. Over next 3 hours: Measure frequency at times of T_o + 60 + n minutes where n = 0, 10, 20, 30... up to and including n = 180.

40.6.5 Sample calculations. The results from the frequency stability measurements consist of the transmitter frequency and times of measurement plus test particulars such as mode of transmitter operation, ambient temperature, and time from cold start to first frequency measurement. It is possible that a given system may be intended to be kept at a condition other than cold as its normal off mode. An explanation shall be provided when the system under test is not operated from a cold start. Sample data sheets to be used for reporting test details and measurement results are shown on figures 21 and 22.

40.6.5.1 A sample calculation to determine the frequency stability at one measurement follows:

Frequency at transmitter cold start (T_o) = 2100.031 Mhz

Frequency after 5 minutes of operation (T_o + 5) = 2100.014 MHz

$$\text{Frequency tolerance} = \left| F,(T_o) - F,(T_o + 5) \right|$$

$$= \left| 2100.031 - 2100.014 \right|$$

$$= 0.017 \text{ MHz.}$$

40.7 Transmitter tunability.

40.7.1 Objective. The objective of this test is to determine the ability of the radar transmitter to tune over its approved frequency band.

40.7.2 Requirements. Each radar shall be tunable in an essentially continuous manner (see 5.3.4).

40.7.3 Application notes. The procedure for the transmitter tunability test consists of performing the transmitter power output and output frequency test with the transmitter tuned, in turn, to each of the required test frequencies. The test procedures for measuring the transmitter power output and operating frequency are described (see 40.2 and 40.6). Refer to 40.2 and 40.6 for the individual test procedures; the selection of the required test frequencies is described in 40.7.4. In the initial selection for each radar band, at least 11 test frequencies shall be used, as specified herein: F_L, F_M, F_H; four frequencies approximately evenly spaced between F_L and F_M, and four frequencies approximately evenly spaced between F_M and F_H. In the absence of specific requirements for power output in the radar procurement specification, test criteria for radar system tunability shall be derived from system specifications that define operational performance requirements.

40.7.4 Procedure. At each tuned frequency, the transmitter shall be adjusted for normal operation as described by the system operating manual. Any efforts to optimize the equipment operation at a particular frequency shall not be attempted unless the procedure is described in the manual.

40.7.4.1 The measured power output values shall be compared to the radar specifications. If measured values differ by more than 2 dB from the specification values, additional frequencies shall be tested near the frequency where the discrepancy is noted in order to describe the problem. For systems which are fixed-tuned or have less than 11 operating frequencies, the number of test frequencies shall be reduced to the maximum available.

40.7.5 Sample calculations. The sample calculations for obtaining the transmitter power output from measured data are described (see 40.2). Sample data forms for recording the power output results are shown (see figures 2 and 3).

50. RADAR ANTENNA MEASUREMENTS

50.1 Requirements summary. The radar antenna measurements and procedures described in this section shall provide data to be compared to the radar antenna characteristics, requirements, and limits specified in 5.4.

50.2 Antenna characteristics.

50.2.1 Objective. For antennas operated by their rotation through 360 degrees of the horizontal plane, the objective shall be to determine the median gain of the antenna, in the principal horizontal plane, by measurement of the antenna pattern. Median gain shall be defined as that level over an angular region at which the probability is 50 percent that the observed or measured gain at any position of the antenna will be less than or equal to that level. For other antennas, the objective shall be to determine the antenna pattern, including the sidelobe levels, relative to the main lobe.

50.2.2 Requirements. The radar antenna shall provide sidelobe characteristics within the limits (see 5.4) for the appropriate radar category.

50.2.3 Application notes. For radar systems other than the types described, appropriate test procedures shall be determined and described in a test plan developed for the cognizant activity directing the test. Upon approval of the test plan and subsequent execution of the tests, any departure from the test plan shall require approval. Guidance in planning antenna pattern and median gain tests on these types of systems shall be provided as specified in MIL-STD-449.

50.2.3.1 The spatial distribution of power radiated into space, if site effects are minimized, shall describe the amount of relative antenna gain existing in directions removed from the main beams of an antenna. The recorded information, commonly referred to as antenna patterns, presents a graphical representation of the energy distribution about the system antenna.

50.2.3.2 The primary procedure uses the radar transmitter, operating in its normal mode with the rated power output, as the transmit signal source. A secondary procedure, which replaces the radar transmitter with a substitute signal source such as a high level CW signal generator is acceptable. With either transmit signal source, the power level delivered to the radar antenna terminals shall be measured and the results noted in the test data.

50.2.3.3 Mechanically rotatable antennas shall be tested (see 50.2.4 through 50.2.4.5). Systems with electronic beam-scanning and limited or no mechanical rotational ability, yet with antennas small and light enough for mounting on a mechanically-rotatable platform, shall use the procedure (see 50.2.4 through 50.2.4.5). Electronic beam-scanning antennas which cannot be mechanically rotated shall use the procedures listed (see 50.2.4.6 and 50.2.4.7).

50.2.3.4 The receiving test antenna shall be positioned at a location which is separated from the radar antenna by a distance (R) determined from the following equation.

$$R > (D_1^2 + D_2^2)/\text{wavelength of test frequency}$$

where D_1 and D_2 are the maximum aperture dimensions for the radar and test antennas respectively, and all parameters are in the same dimensional units. The test antenna height shall coincide with a horizontal plane through the radar antenna. Both the test antenna site and the path to the radar antenna shall be free from obstructions and objects which could cause reflections. Elevate the test antenna for the maximum received signal level.

50.2.3.5 For those systems where the test antenna cannot be located in the radar main beam maximum, this measurement shall be performed using near-field measurement techniques. If near-field techniques are employed, the equivalent far-field patterns shall be determined using appropriate techniques before comparing the results to the requirements (see 5.4).

50.2.3.6 The antenna pattern recording system (test receiver plus recorder) shall have a dynamic range of at least (G + 20)dB where G is the gain, in dB, of the radar antenna main beam, with a minimum of 40 dB for the system. The dynamic range can be expanded by removing attenuation at the test receiver input, then obtaining a second antenna pattern recording. With this procedure, the second recording shall show the higher pattern levels off-scale but the lower levels shall be reproduced. The calibration procedure shall be as described for the initial antenna pattern recording which shows the main lobe on-scale.

50.2.3.7 Statistical measurements of the transmitted beam shall be taken with the main beam scanning the solid sector in the normal scanning mode. Time shall be allowed at each test position and frequency for at least 10 complete scan cycles of the solid scan sector to be made by the main beam. Where possible, the scanning measurements shall be synchronized in time so that the outputs of each complete scan cycle shall be correlated with the other scan cycles. The output data shall be used to determine the statistical mean and the deviation from the mean of the power density for the fundamental frequency at each test point. For frequency-scanning or frequency-agile radars, either a receiver bandwidth wide enough to encompass the radar scanning bandwidth or a number of receivers, each tuned to a separate frequency employed in the agile mode, shall be used. As an alternate, for frequency agile radars with a limited number of discrete frequencies, one receiver shall be used. The receiver can be tuned successively to each frequency and statistics collected.

50.2.3.8 The procedures for measuring the receiver antenna patterns shall be similar to those specified for the transmit pattern, except that the test signal is radiated from each test site location to the array antenna.

50.2.4 Procedure. The block diagram for the antenna pattern test shall be as shown on figure 23. This test shall be performed at the mid-band test frequency, or at the horizon frequency for frequency-to-elevation scanning radars.

50.2.4.1 The output of the test antenna shall be connected to the input of the test receiver via a length of transmission line with attenuators as required to prevent overloading. The test receiver shall be adjusted as described for measuring the peak level of the radar signal (see 40.2).

50.2.4.2 With the radar and test antennas aligned for maximum power transfer, the test receiver shall be tuned for maximum response at the radar fundamental frequency (F_o). For frequency-to-elevation scanning radars, the test receiver shall be tuned to the horizon beam frequency. The recorder shall connect to the test receiver. The recorder gain controls shall be adjusted for nearly full scale deflection of the recorder pen. The level and frequency of the radar F_o shall be measured using the procedure given for measuring peak power output (see 40.2). In this test the signal sample shall

be provided by the test antennas rather than from a signal sampler. Calculate the radar power density using the following equation:

$$P_D = P_R - 20 \log (\lambda) - GR + 11.0$$

where:

P_D = power density at test antenna, dBm/m^2
P_R = radar F_o level at test antenna terminals, dBm
G_R = test antenna gain, dB, and $\lambda = 300/f_{MHz}$, meters.

The power density at the test antenna shall be compared to the expected F_o power density level. The measured power density (equation on previous page) shall agree within 2 dB of the expected power density (equation below). The equation for the main beam power density is:

$$P_D = P_T + G_T - 20 \log R - 11.0$$

where:

P_D = power density at test antenna, dBm/m^2
P_T = radar peak transmitted power, dBm
G_T = radar antenna nominal main beam gain, dB
R = distance from radar antenna to test antenna, meters.

50.2.4.3 With all instrumentation set as specified, rotate the system antenna and start the recorder. The recorder shall be operated to obtain two complete 360 degree sweeps of the system antenna on the recording. The recorder response times and antenna rotational speeds necessary to give at least 1 dB accuracy in the antenna pattern recording shall be obtained from the following equation:

$$W < 50\ \Theta_{3dB}/T_r$$

where:

W = rotational speed, r/min
Θ_{3dB} = 3–dB width of antenna main lobe, degrees
T_r = response time of the test receiver and instrumentation, milliseconds.

50.2.4.4 To calibrate the antenna pattern recording, the main beam of the radar antenna shall be re-aligned for a maximum received level on the test antenna. Additional attenuation shall be inserted in the line from the test antenna, in 5 dB steps. After each 5 dB increase, the resulting deflection of the recorder pen shall be marked.

50.2.4.5 For antennas that can be elevated, an antenna pattern measurement shall be performed in the vertical plane using the procedure described for the azimuthal pattern recording.

50.2.4.6 For electronic beam-scanning antenna which cannot be mechanically rotated, the following procedures shall be used. The test antenna shall be placed sequentially at 10 equally spaced angular positions, with the test antenna positioned as high as possible but not above the lowest elevation of the system antenna main beam maximum for the following tests. The test antenna positions shall be on a semi-circular arc starting at the azimuth boresight location and ending 180 degrees offset in azimuth. One each of the test positions shall be at each end of the specified arc. (Phased array systems are usually symmetrical by design; the mirror image of the test positions with associated data shall be reflected to the other side of the antenna.)

50.2.4.7 The azimuthal beam-scanning measurement shall be performed if the main beam can be easily steered at will. The main beam of the phased array shall be steered as close as possible to the elevation of the test antenna and, with the elevation constant, shall be sequentially stepped in azimuth through the complete scan sector. The azimuthal beam-scanning measurement shall be taken with the test antenna at the azimuthal array normal test position, at the test position nearest the maximum angle of the scan sector, at an optional test position, and at the test position 180 degrees in azimuth from the array normal test position.

50.2.5 Sample calculations. The results from the antenna characteristics measurements consist of antenna pattern recording (strip chart or polar format) and associated calibration data such as attenuation inserted, cable loss, system antenna rotation rate, relative amplitude level, and test receiver and recorder response times. A sample antenna pattern recording (strip chart format) is shown (see figure 24).

50.2.5.1 A sample calculation to determine the power density measured at the test site from measured data follows:

- Transmitter tuned frequency (F_o): 3000 MHz
- Signal generator calibration level at peak of antenna pattern mainlobe (P_{GEN}): −13.0 dBm
- Attenuation inserted at test receiver input (A_1): 50.0 dB
- Attenuation, coax to test antenna (A_2): 1.5 dB
- Test antenna gain (G_R): 16 dBi
- Wavelength = 300/3000 = 0.10 meters.

The received level at the test antenna is determined from:

$$\begin{aligned} P_R &= P_{GEN} + A_1 + A_2 \\ &= -13.0 + 50.0 + 1.5 \\ &= 38.5 \text{ dBm.} \end{aligned}$$

Next, the power density at the test antenna is calculated (see 50.2.4.2) as follows:

$$\begin{aligned} P_D &= P_R - 20 \log(\lambda) - G_R + 11.0 \\ &= 38.5 - 20 \log(0.1) - 16.0 + 11.0 \\ &= 53.5 \text{ dBm/m}^2. \end{aligned}$$

The sample calculation for the expected power density assumes the following parameters:

- Radar antenna power input (P_T): 90.0 dBm
- Radar antenna gain (G_T): 25.0 dBi
- Distance from radar antenna to test antenna (R): 316 meters.

Using the equation (see 50.2.4.2) the expected power density at the test site is calculated as follows:

$$\begin{aligned} P_D &= P_T + G_T - 20 \log(R) - 11.0 \\ &= 90.0 + 25.0 - 20 \log(316) - 11.0 \\ &= 54.0 \text{ dBm/m}^2. \end{aligned}$$

60. RADAR RECEIVER MEASUREMENTS

60.1 Requirements summary. The radar receiver measurements and procedures described in this section provide data for comparison to the acceptance bandwidth, susceptibility characteristics, frequency tolerance, tunability and oscillator radiation requirements and limits (see 5.5).

60.2 Overall selectivity.

60.2.1 Objective. The objective of this test is to determine the receiver response characteristics at and near the receiver tuned and image frequencies.

60.2.2 Requirements. The overall receiver selectivity characteristics shall satisfy the requirements (see 5.5) for the appropriate category of radar.

60.2.3 Application notes. In the first part of the test, the receiver response to test signals at and near the radar tuned frequency shall be determined. In the second part, the response to test signals at and near the receiver image frequency shall be determined. Both parts shall be performed with the radar receiver tuned to the mid-frequency of its tuning range (F_M). If the receiver switches bandwidth during its operation, this test shall be repeated for each bandwidth used in the radar operation.

60.2.3.1 The receiver selectivity characteristics give an indication of the overall gain and sensitivity of the receiver at its tuned frequency as well as its responses at frequencies slightly removed from the tuned frequency. The selectivity characteristics are mostly determined by the IF amplifier tuned circuits and shall be fairly symmetrical about the center frequency. The level of these responses near

the fundamental and image frequency indicate the ability of the receiver to discriminate against off-channel radiation through the acceptance bandwidth or selectivity.

60.2.3.2 The radar receiver measurements specified herein shall be performed on all receivers of the same radar except in the case of phased array radars with more than fifteen identical parallel receivers. For these radars fifteen of the receivers shall be selected through the use of a table of random numbers. The standard deviation of the measured data, corrected for any antenna weighing, shall be calculated. If the standard deviation is greater than 2.0 dB, additional receivers shall be measured. The number of receivers to be measured shall be determined using the student-t distribution. The total receiver response (all receivers) shall then be determined statistically.

60.2.3.3 For pulsed radar receivers, the test signal generator shall be modulated with a pulsed signal which is approximately 10 times the longest operating pulsewidth for the tuned circuit being measured. The wide pulsewidth produces a relatively narrow energy spectrum in comparison to the receiver bandwidth. This narrow spectrum avoids erroneous bias buildup in the receiver's gain control circuits. In addition, the narrow spectrum provides a close approximation of the CW selectivity characteristics of the receiver.

60.2.3.4 For nonpulsed receivers, the test signal shall be unmodulated (CW). The point for measuring the receiver output shall be past the receiver second detector, if possible, and shall give a signal which represents normal operation of the system.

60.2.4 Procedure. The block diagram of the test setup shall be as shown on figures 25 and 26.

60.2.4.1 The test frequency shall be tuned about F_M for an optimum response at the receiver output. The test signal level shall be reduced to obtain midpulse minimum visible signal (MPMVS) at the receiver output. The receiver video output shall be observed at the output of the video detector using a wide bandwidth oscilloscope. With the MPMVS output established, the frequency and level of the test signal generator shall be recorded. The insertion loss of test devices between the point where power level is referenced and the receiver input shall be determined.

60.2.4.2 The test signal generator level shall be increased to 3 dB above the tuned frequency (F_o) MPMVS level. The generator frequency shall be tuned above F_o to regain the MPMVS response at the receiver output. This test signal frequency shall be measured and noted. This procedure shall be repeated with the generator frequency tuned below F_o. The procedure shall be repeated above and below F_o with the test signal level increased in steps to 6, 12, 20, 40, 60 and, if possible, 80 and 100 dB above the MPMVS sensitivity level at F_o.

60.2.4.3 The procedure shall be repeated for frequencies at and near the receiver image response. In this case, the maximum test signal level shall not be required to exceed 60 dB above the MPMVS sensitivity level measured at F_o.

60.2.5 Sample calculations. The selectivity measurement results consist of frequencies corresponding to specified amplitude response levels and associated information such as receiver operating mode, bandwidth and test point. Sample selectivity data forms are shown (see figures 27 through 30).

60.2.5.1 A sample calculation to illustrate the procedure to determine the incremental frequency values and bandwidth follows:

Measured data:

- Radar tuned frequency (F_o): 3001.868 MHz
- Frequency at 6 dB response above F_o: 3003.655 MHz
- Frequency at 6 dB response below F_o: 2999.997 MHz

The incremental frequency above F_o ($+\Delta F$) is calculated as

$$+\Delta F = 3003.655 \text{ MHz} - 3001.868 \text{ MHz} = 1.787 \text{ MHz}$$

$$-\Delta F = 3001.868 \text{ MHz} - 2999.997 \text{ MHz} = 1.871 \text{ MHz}$$

The 6 dB bandwidth (BW) is calculated from

$$BW = |+\Delta F| + |-\Delta F| = 1.787 + 1.871 = 3.658 \text{ MHz}$$

60.3 Spurious response.

60.3.1 Objective. The objective of this test is to determine the response characteristics of the radar receiver to signals at frequencies outside the range of the selectivity test.

60.3.2 Requirements. The required spurious response characteristics of radar receivers shall be as specified (see 5.5).

60.3.3 Application notes. The receiver input reference point shall be selected at, or as close as possible to, the connection point of the transmission line to the system antenna (antenna terminals). Where it is not practical to establish the receiver input reference point at the system antenna, additional measurements shall be obtained to describe the transmission line loss between the point which is used and the system antenna terminals.

60.3.3.1 The range of test signal frequencies are specified in 5.5. The test signal generator shall be modulated with a pulse of the same width as the system pulse and triggered by the system trigger. For systems using waveguide transmission line, the signal generator output shall be applied at the receiver input through appropriate waveguide transitions and adapters to ensure, as much as possible, dominant mode incidence to the receiver. Adapters and transitions shall be changed as necessary to correspond with the test signal frequency. Filters shall be used to prevent unwanted signal generator outputs from entering the receiver. Attenuators shall be inserted at the receiver input to provide a better match between the test signal source and the plane of reference.

60.3.4 Procedure. Typical block diagrams of the test setup for spurious response measurements shall be as shown on figures 25 and 26.

60.3.4.1 The receiver shall be tuned to F_M and adjusted for normal operation in the selected mode. With the test signal generator set to the low end of the required frequency range, the test signal level shall be adjusted at the receiver input such that the value exceeds the measured receiver sensitivity level by at least 10 dB plus the spurious response rejection value specified in table VIII for the appropriate radar category. Starting at the low end of the required frequency range, the frequency of the test signal generator shall be increased until a response is observed on the receiver output monitor. The receiver response and point for monitoring shall be the same (see 60.2) as that used for measuring the overall selectivity. With the frequency of the test signal adjusted for a maximum response, the test signal level shall be reduced to obtain the MPMVS response (see 60.2) (MDS for pulse radars). The test signal generator output level and frequency shall be noted. After adjusting the test signal generator level to be value described for the start of the test, the test signal frequency shall be increased until another spurious response is located. The scan and measurement procedure shall be repeated for all spurious responses up to the maximum test frequency as specified (see table V) for the emission bandwidth test.

60.3.4.2 The spurious response test procedure shall be repeated for each receiver tuned frequency specified and each mode and band of receiver operation.

60.3.5 Sample calculation. The results from the spurious response measurements typically consist of test signal generator level and frequency at each spurious frequency point plus associated information such as attenuation inserted and insertion losses of adapters transitions and cables. Sample data forms are shown (see figures 31 and 32).

60.3.5.1 A sample calculation to obtain the spurious response level follows:

Measured data:

Receiver tuned frequency: 3650 MHz

Test pulse width: 5.0 microseconds

PRF: 650 pps

Signal generator level (P_{GEN}): −20.0 dBm

Signal generator frequency: 4203.615 MHz
Attenuation inserted (A_1): 5.0 dB
Cable loss (A_2): 2.2 dB
Adapter loss (A_3): 0.8 dB.

The power input at the receiver input plane of reference (P_R) is calculated as follows:

$$\begin{aligned} P_R &= P_{GEN} - A_1 - A_2 - A_3 \\ &= -20.0 - 5.0 - 2.2 - 0.8 \\ &= -28.0 \text{ dBm.} \end{aligned}$$

60.4 Receiver tunability and frequency stability.

60.4.1 Objective. The objectives of this test shall be to verify that the radar receiver is tunable over the required frequency range and that the frequency stability is within the frequency tolerance specified. This test shall also verify that crystal controlled receivers achieve the tunability requirements of operation at essentially any frequency across the band with a crystal change.

60.4.2 Requirements. The frequency stability of receivers shall be commensurate with or better than the frequency tolerance of the associated transmitter. The frequency tolerance requirements for radar transmitters, which apply to radar receivers shall be as specified (see 5.3.3 and 5.5.4) and tunability requirements shall be as specified (see 5.3.4 and 5.5.3). The frequencies to be measured for the tunability test shall be selected in accordance with 40.7 for transmitter tunability. The frequencies to be selected for the frequency stability test shall be F_L, F_M, and F_H as specified in table X. The receiver frequency stability test requirement shall be waived for radar systems which normally employ automatic frequency control (AFC) or similar means for maintaining the receiver tuned frequency equal to the transmitter frequency. The receiver tunability and frequency stability test shall be performed with the radar system or equipment operating at nominal environmental temperatures as specified and the minimum and maximum environmental temperatures as specified.

60.4.3 Application notes. A measure of the tunability of a radar receiver is its ability to attain rated sensitivity over its operating band. The receiver tunability shall be determined from measurements of the receiver sensitivity at each test frequency as specified. Unless otherwise specified for the receiver nominal parameters, the standard output response shall be minimum discernable signal (MDS) observed on the test oscilloscope display. If the required sensitivity of the receiver is not specified over the operating band, the minimum signal level and corresponding receiver standard response should be established by the contracting activity and included in the test plan.

60.4.3.1 A measure of the frequency stability of a radar receiver is the ability of its frequency producing circuits to maintain the receiver tuned frequency within the frequency tolerance specified.

60.4.4 Procedure. The receiver tunability and frequency stability measurements shall be performed as a closed system test. The block diagram is shown on figure 33.

60.4.4.1 The tunability test shall begin by tuning the radar receiver for normal operation on one of the test frequencies specified. The test signal shall be modulated to equal the nominal characteristics for which the radar system or equipment specifications are given. The test signal shall be triggered from the radar modulation trigger, with a delay to place the signal at an equivalent range such that any sensitivity time control (STC) is not activated (unless allowance for the effect of STC has been made in establishing the standard response). The test signal shall be tuned to the receiver frequency. The receiver output shall be monitored with the oscilloscope. The generator level shall be adjusted to obtain the standard response at the receiver output. The generator frequency shall be measured with the frequency counter and the value recorded along with the receiver output level required for the receiver output standard response. The procedure shall be repeated for the remaining receiver test frequencies as specified. The entire procedure shall be performed with the radar system or equipment operating under the environmental temperature conditions as specified.

60.4.4.2 The receiver frequency stability shall be determined by accurately measuring the frequency stability of the local oscillator frequency with the frequency counter. In case of the multiple conversion receiver, the frequency of all local oscillators shall be measured. The time over which the receiver stability is measured shall include the stability requirements specified by the contracting activity or contract. The frequency stability test shall also include the frequency measurement over a period of 4 hours at the following intervals:

a. Within first hour: After receiver turn-on, at time T_o, measure frequency at 10-second intervals during first 2 minutes of operation. Beginning at times of T_o + n minutes, where n = 5, 10, 15... up to 60, measure frequency at 10-second intervals for a period of 1 minute.

b. Over the next 3 hours: Measure frequency at time of T_o + 60 + n minutes where n = 0, 10, 20, 30... up to and including n = 180.

The turn-on time in a. from a cold start may vary from one piece of equipment to another. Turn-on time will be defined as "the earliest time, from a cold start, that the equipment is intended to radiate and receive signals". The receiver tuned frequencies at each point over the required time interval shall be determined from the measured local oscillator frequency and the receiver intermediate frequency. The variation in the receiver tuned frequency at times T_o + n compared to the tuned frequency at time T_o shall not exceed the frequency tolerance as specified.

60.4.4.3 Sample data forms for recording receiver tunability and frequency stability measurements results are shown on figures 34, 35, and 36.

60.4.5 Sample calculations. The results from the receiver tunability measurements typically consist of the receiver sensitivity measured at the required test frequency (see 60.4.2). Sample calculations for spurious response (see 60.3.5) are applicable for sensitivity measurements. The results from the receiver frequency stability test consist of receiver local oscillator(s) frequency measurements and associated information such as mode of receiver operation, cold start time, turn-on time, and time for each frequency measurement point.

60.4.5.1 In the stability data reduction, the measured local oscillator frequency is first converted to the equivalent frequency at the receiver input.

Measured data:

Local oscillator frequency at start of test (F_{lo}, T_o): 1250.764 MHz

Local oscillator frequency at time T_1 (F_{lo}, T_1): 1250.748 MHz

Receiver intermediate frequency (F_{IF}): 30 MHz

Local oscillator frequency relative to receiver tuned frequency: above.

Receiver tuned frequency is determined as follows:

$$F_o = F_{lo} - F_{IF}$$

therefore,

$$\begin{aligned} F_o,T_o &= 1250.764 - 30 \\ &= 1220.764 \text{ MHz} \\ F_o,T_1 &= 1250.748 - 30 \\ &= 1220.748 \text{ MHz.} \end{aligned}$$

The frequency tolerance at time T_1 is calculated as follows:

$$\begin{aligned} \text{Frequency tolerance} &= \left| F_o,T_o - F_o,T_1 \right| \\ &= \left| 1220.764 - 1220.748 \right| \\ &= 0.016 \text{ MHz.} \end{aligned}$$

60.5 Receiver radiation.

60.5.1 Objective. The objective of this test is to determine the level of receiver radiated signals at the receiver input terminals.

60.5.2 Requirements. No receiver radiations shall exceed the maximum values as specified in table IX for the appropriate radar category.

60.5.3 Application notes. Energy that is generated within the radar receiver by local oscillators and other signal producing circuits may be radiated from the radar system antenna. In this manner, the receiver acts as a transmitter and may emit energy which becomes interference to nearby equipment.

60.5.3.1 To provide assurance that the receiver oscillator radiation meets the requirement, the level of the local oscillator fundamental signal shall be determined for all transmitter frequencies which are selected for use in the transmitter tunability test (see 40.7).

60.5.3.2 The test receiver shall be a spectrum analyzer or a frequency selective voltmeter (FSVM). The sensitivity of the test receiver shall be at least 5 dB greater than the specification limit, measured at the input to the transmission line leading to the test receiver.

60.5.3.3 If numerous oscillator emissions are found in the frequency scan, it may be advantageous to display sequential frequency sectors on the spectrum analyzer, photograph each display and perform the calibration procedure as described for spurious emission (see 40.5). This alternate procedure is especially applicable to frequency scanning or frequency hopping radars where the scan sequence cannot be stopped for single frequency analysis.

60.5.3.4 Over frequency regions where no oscillator radiations are detected, the sensitivity of the test receiver setup shall be checked at points over the scan range to demonstrate the required measurement sensitivity. The insertion loss of the adapter used at the receiver input shall be determined for each frequency where oscillator radiation is measured.

60.5.4 Procedure. This test shall be performed as a closed system test. A typical block diagram of the test setup is shown on figure 37. Disconnect the transmission line to the system antenna at the nearest available breakpoint external to the equipment enclosure. Terminate the transmission line on the receiver side of the disconnect point in an adapter as necessary to match the transmission line to the test receiver.

60.5.4.1 For each of the test frequencies as specified in table X, start at the low extreme of the frequency range as specified in table IX and increase the test receiver frequency until a signal is detected. Tune the test receiver for maximum response and record the response level on the data sheet as shown on figure 38. Connect the coaxial cable leading to the test receiver to a CW signal generator. Tune generator to obtain a frequency matching that of the reference analyzer response. Adjust the generator level to duplicate the reference response level. Record the generator frequency (measured with the frequency counter) and level readings. Continue the frequency scan until the next oscillator emission is found. Repeat entire procedure just described for each oscillator emission encountered in the frequency range as specified in table IX.

60.5.5 Sample calculations. The results from receiver oscillator radiation measurements consist of signal generator CW substitution level and frequency and associated test data such as adapter loss. Sample oscillator radiation data forms are shown (see figures 38 and 39).

60.5.5.1 A sample calculation to obtain the receiver oscillator radiation level follows:

Measured data:

Signal generator frequency: 1250.764 MHz
Signal generator level (P_{GEN}): −38.0 dBm
Adaptor loss (A_1) = 1.4 dB.

The oscillator radiation level (P_{CW}) is calculated

$$\begin{aligned} P_{CW} &= P_{GEN} + A_1 \\ &= -38.0 + 1.4 \\ &= 36.6 \text{ dBm.} \end{aligned}$$

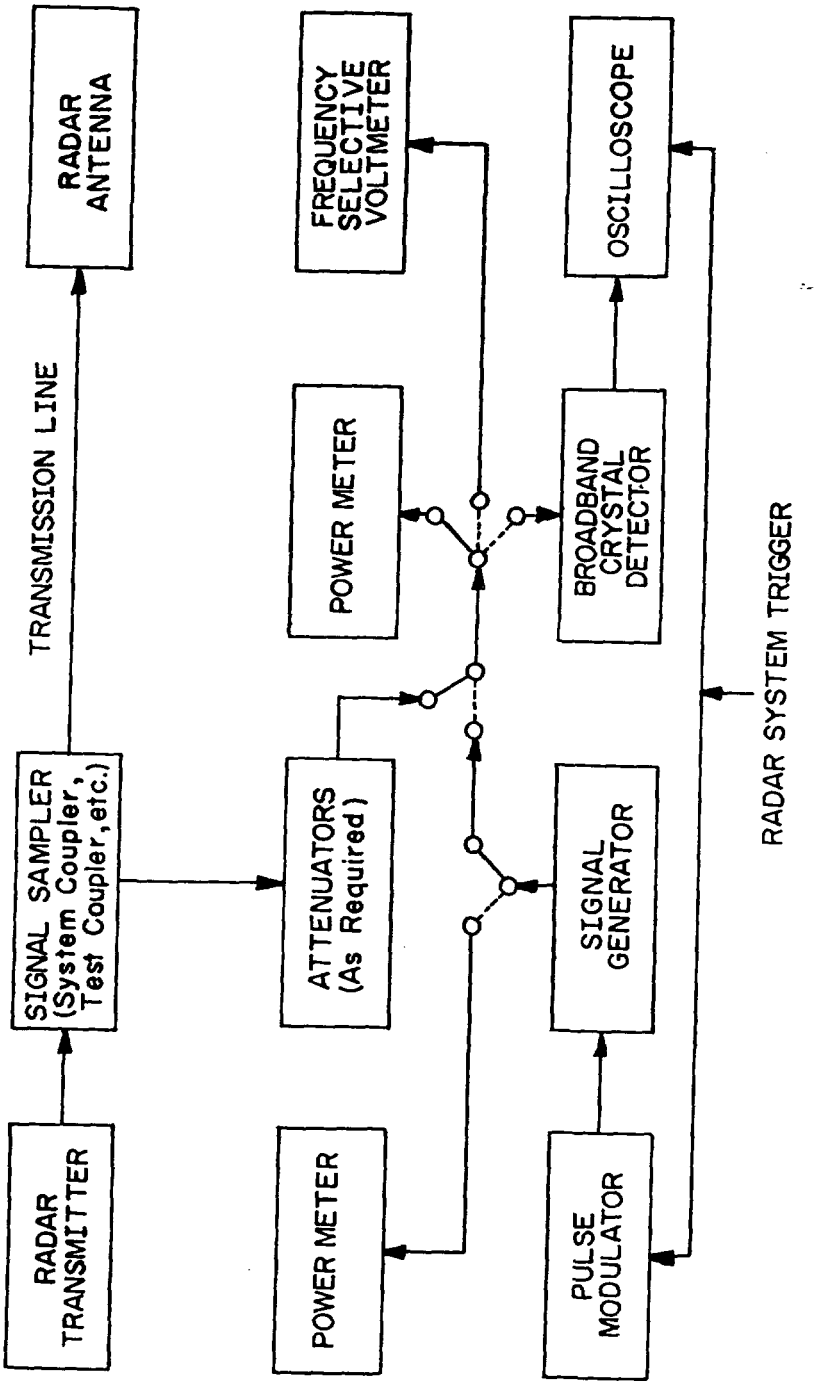

FIGURE 1. *Transmitter power output measurement block diagram.*

TRANSMITTER MEASUREMENTS
POWER OUTPUT
INTERNALLY MODULATED PULSED TRANSMITTERS

Equipment under test

Transmitter nomenclature _____

Type _____ Serial No. _____

Tuning range or band _____

Rated power output (indicate average, peak or PEP) _____ dBm

Configuration _____

Significant control positions _____

_____

_____

_____

Test equipment

_____

_____

_____

_____

Significant control positions _____

_____

_____

_____

Test information

Point of signal injection _____

Point of measurement _____

_____

_____

_____

FIGURE 2. *Sample transmitter power output data form A.*

TRANSMITTER MEASUREMENTS
POWER OUTPUT

Xmtr. nomenclature _____ Serial No. _____
Date _____

Frequency (MHz)	Pulse width[1]		PRF		Measured power		Losses (dB)[2]	Power out	
	Nom (μsec)	Meas (μsec)	Nom (pps)	Meas (pps)	P_{Avg} (dBm)	P_p (dBm)		P_{Avg} (dBm)	P_p (dBm)

[1] 1/2 Voltage.
[2] Signal sampler, attenuation inserted and transmission line components combined.

FIGURE 3. *Sample transmitter power output data form B.*

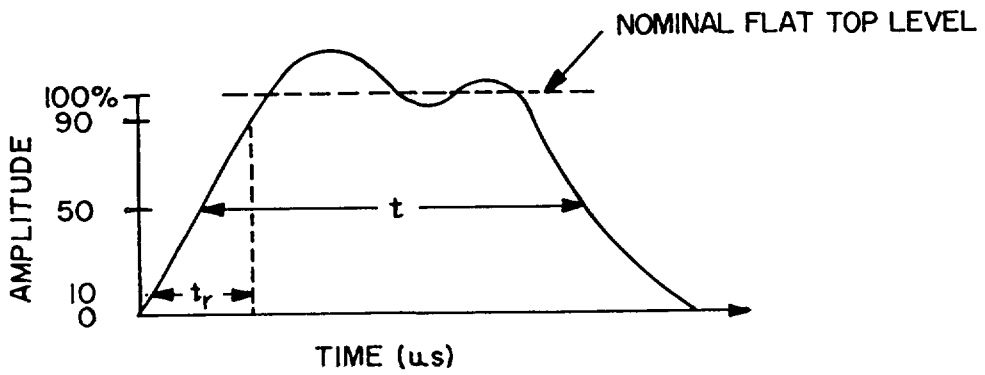

FIGURE 4. *Determination of t and t_r (pulse waveform).*

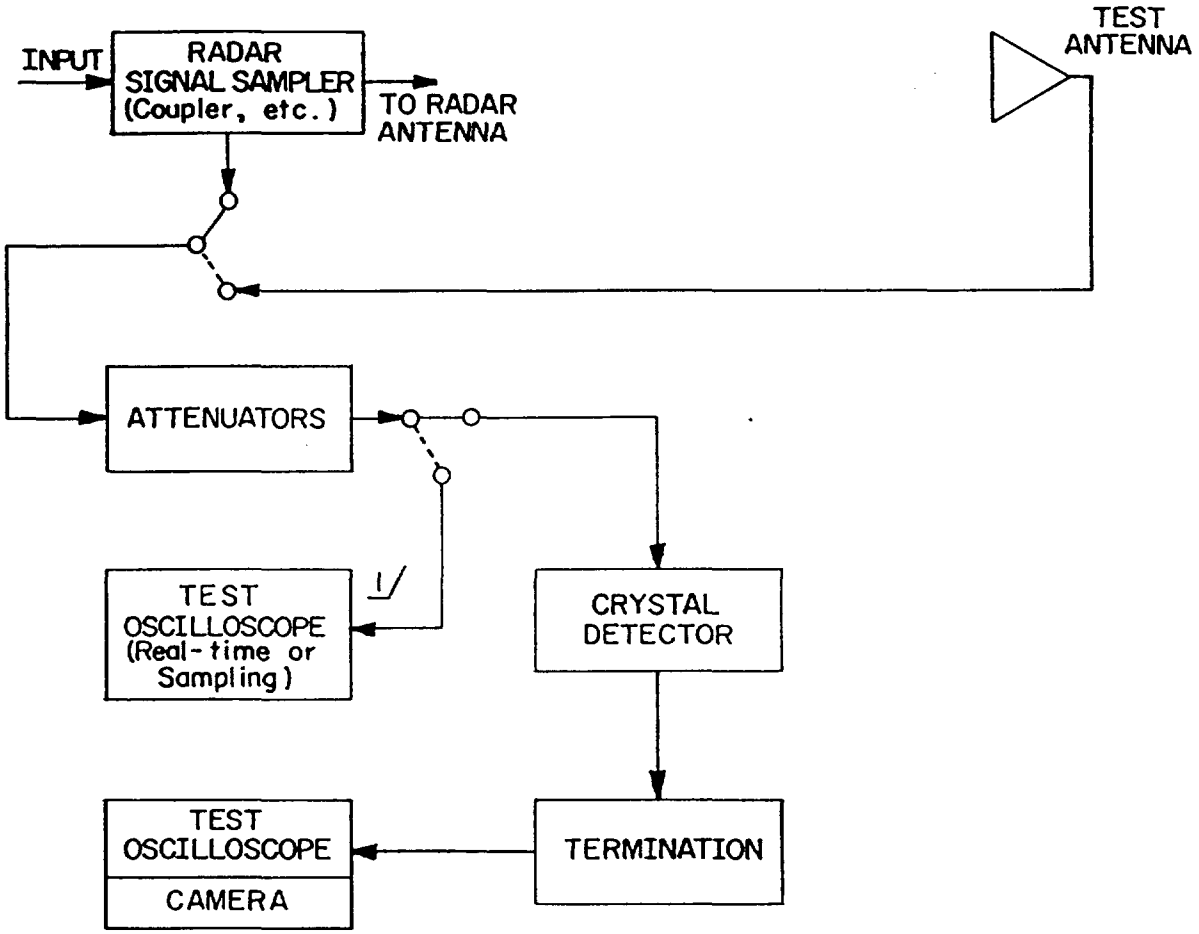

[1]Termination will be required if the input impedance is high.

FIGURE 5. *Transmitter pulse width, rise time and PRF measurement block diagram.*

Equipment under test

Transmitter nomenclature _____

Type _____ Serial No. _____

Tuning range or band _____

Modulation _____ Mod. BW. _____

Pulse width _____ μsec, PRF _____ pps

Configuration _____

Significant control positions _____

_____

_____

_____

_____

Test equipment

_____

_____

_____

_____

Significant control positions _____

_____

_____

_____

Test information

Point of signal injection _____

Point of measurement _____

_____

_____

_____

FIGURE 6. *Sample transmitter pulse width data form A.*

Xmtr. nomenclature_____ Serial No. _____
Date _____

Transmitter tuned freq. (MHz)	Photo No.	Time (24 hour base)	Pulse width of fund. (μsec)

FIGURE 7. *Sample transmitter pulse width data form B.*

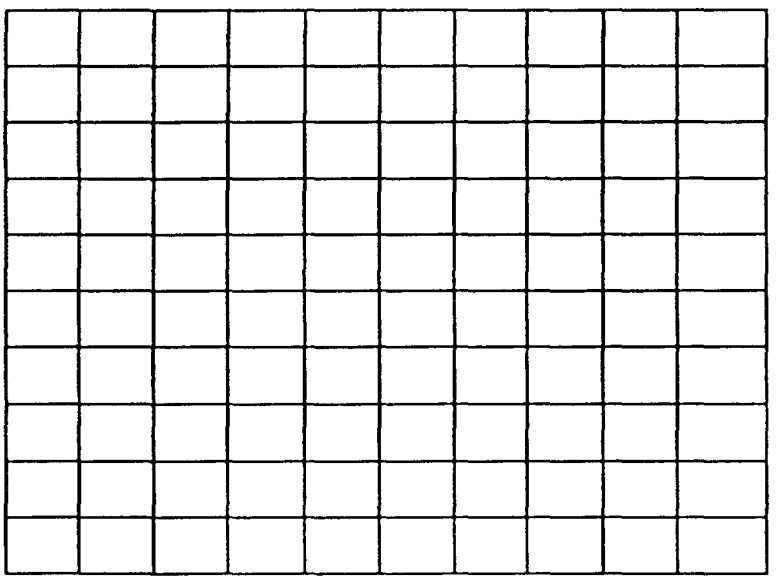

Time μsec/cm

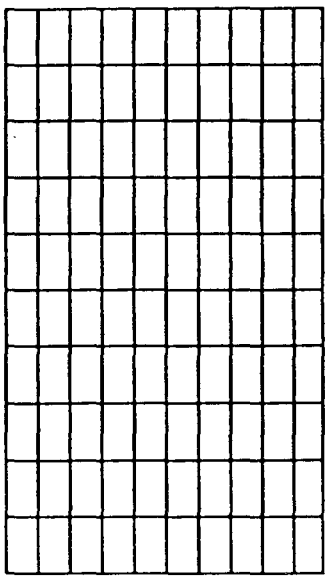

Volts

Photo No. _____

Equipment nomenclature _____

Serial No. _____ Test equipment bandwidth _____

Tuned frequency (f_o) _____ Mhz

Test frequency _____ Mhz

Measured values (from photograph)

Pulsewidth _____ μsec[1] PRF _____ pps

Rise time _____ μsec[2] Fall time _____ μsec

Comments _____

[1]50 Percent peal voltage point.
[2]10 to 90 Percent of peak voltage (fall time: vice versa).

FIGURE 8. *Sample transmitter pulse width or rise time data form.*

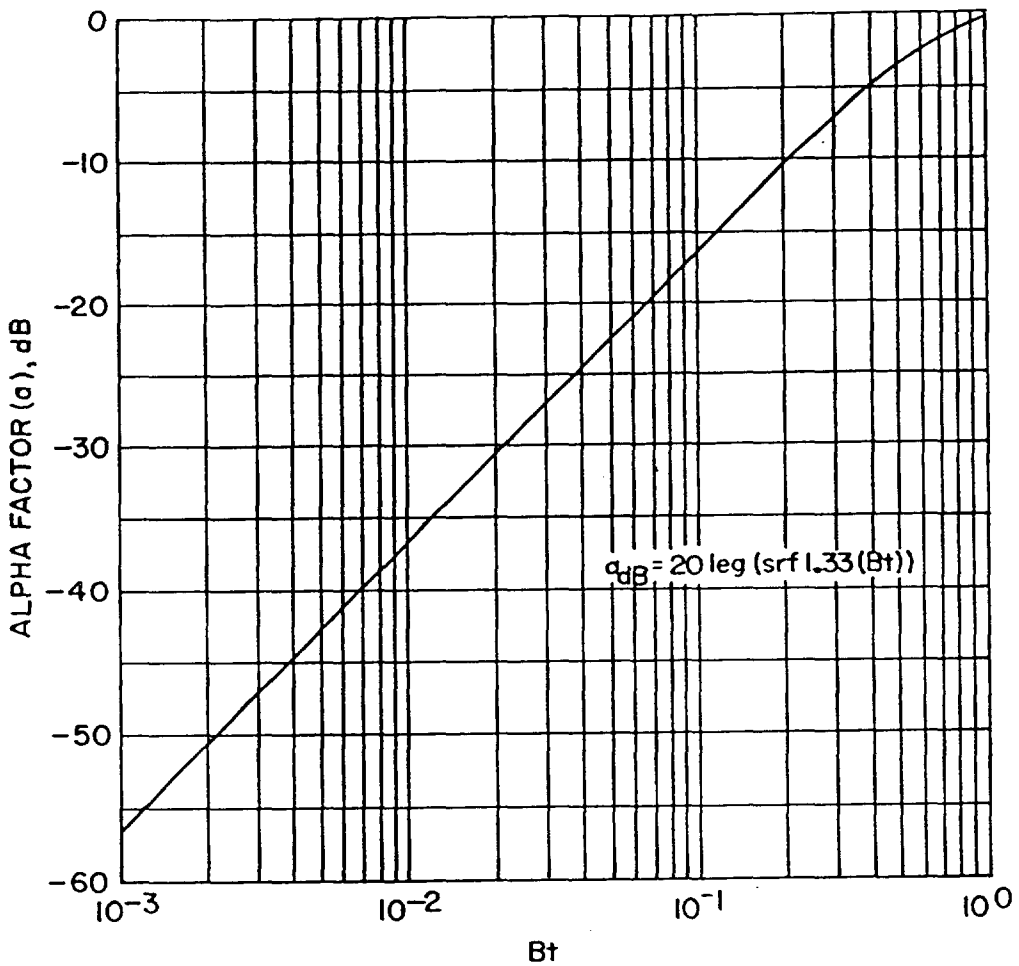

FIGURE 9. *Spectrum analyzer alpha factor (a) versus bandwidth (b) – pulse width (t) product.*

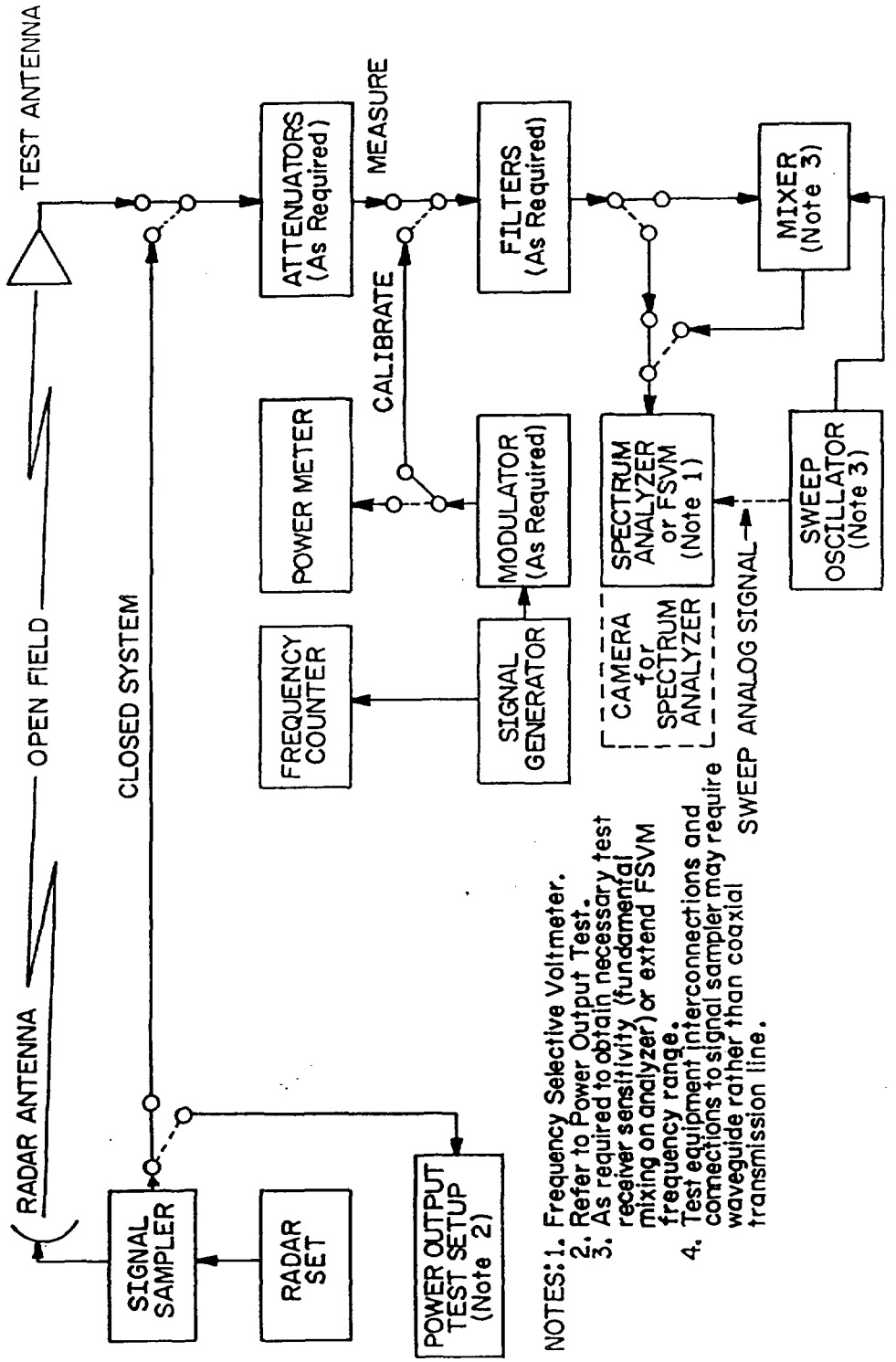

FIGURE 10. *Transmitter emission characteristics measurement block diagram.*

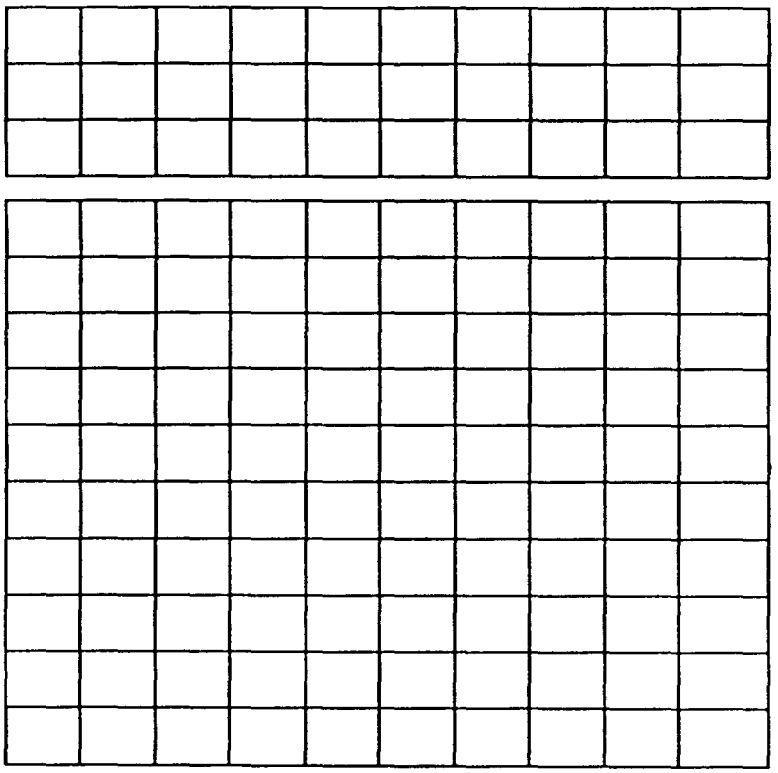

Frequency (MHz)

Amplitude linearity correction (dB)

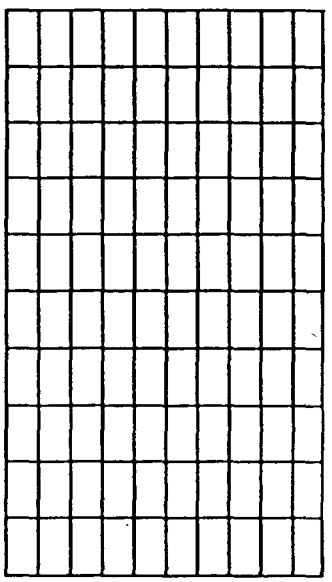

Sig. gen. output (dBm)

Photo number _____ Date _____

Transmitter tuned frequency _____ MHz Peak power output _____ dBm

Spectrum analyzer:

Bandwidth _____ kHz

Sweep width _____ MHz Sweep rate _____ Hz

Comments _____

_____

_____

NOTE: Each vertical and horizontal reticle should be calibrated either with an attached calibrated curve or by scaling the photograph.

FIGURE 11. *Sample transmitter emission spectrum photograph data form.*

Date: _____ Time: _____ Transmitter tuned frequency: _____

Peak power output: _____ dBm Pulsewidth: _____ μsec Pulse repetition frequency: _____ pps

Modulation: _____ Compression ratio: _____

Spectrum analyzer resolution bandwidth: _____ kHz

OPEN FIELD TESTS: Test antenna: _____ Gain: _____ dB Polarization: _____

Height above ground: _____ feet Alinement (relative to radar antenna): Bearing: _____ degrees

Elevation: _____ degrees Polarization: _____ Coupling (radar-to-test antenna terminals): _____ dB

Frequency (MHz)	Δf (±MHz)[1]	Signal generator level (dBm)	Measured cable loss (dB)	Attenuation inserted (dB)	Coupling (dB)[2]	Power spectral level (dBm/kHz)

[1]Referenced to transmitter tuned frequency.
[2]Closed system – coupling, sampler attenuated output to radar antenna input.
Open field – coupling, radar antenna input to test antenna terminals.

FIGURE 12. *Sample transmitter emission spectrum data form.*

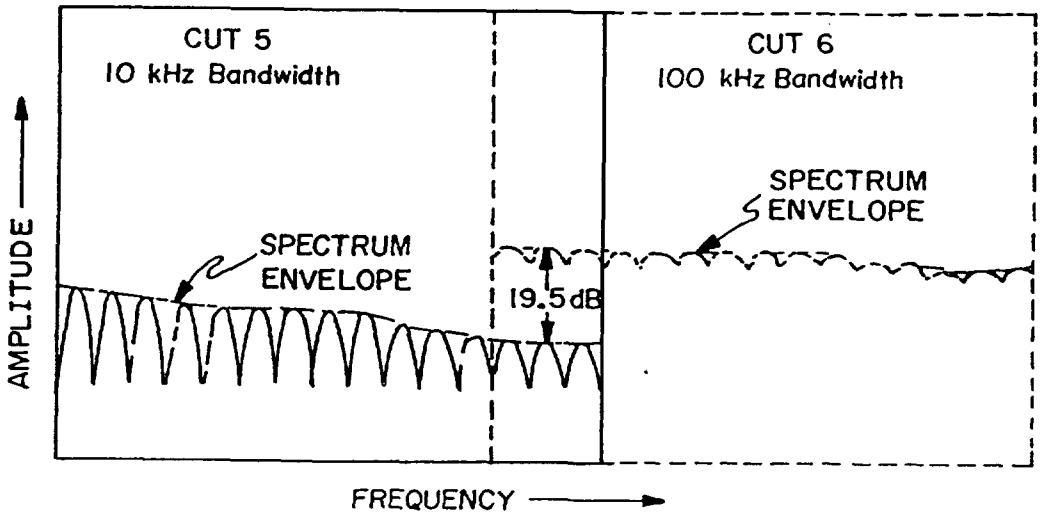

FIGURE 13. *Illustration of emission spectrum photographs, overlap and analyzer bandwidth increased.*

Pulsed
Nonpulsed

Coax
Waveguide

Equipment under test

Xmtr nomenclature _____

Type _____ Serial No. _____

Output tube _____

Type _____ Serial No. _____

Significant control positions _____

_____

_____

_____

Test equipment

Spectrum analyzer used _____ Serial No. _____

3 dB resolution BW _____ kHz CW BW _____ kHz

MDS _____ dBm

Modulation description _____

Cable: Type _____ Length _____ Meters

_____

_____

Significant control positions _____

_____

Test information

Description of analyzed pulse:

PW[1] _____ PRF _____

Rise time _____ Fall time _____

Compression ratio _____

[1]50 percent voltage point, rise time: 10 to 90 percent Pk voltage (fall time vice versa)

FIGURE 14. *Sample transmitter closed system spurious emission data form A.*

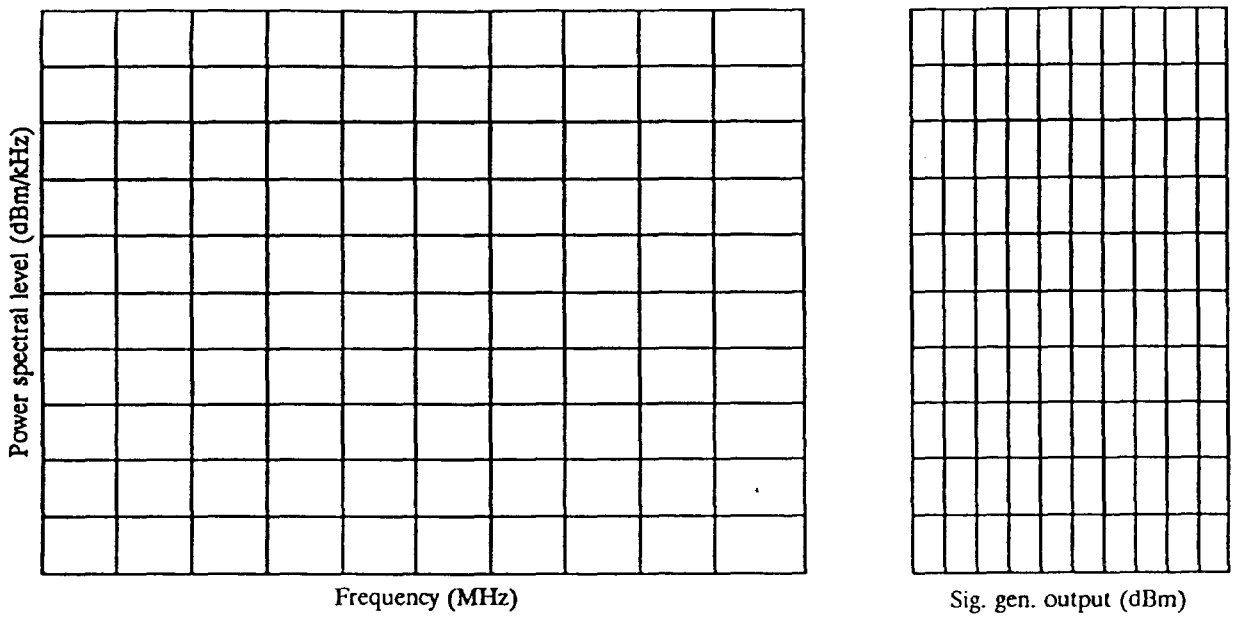

Photo No. _____ Date _____

Transmitter tuned frequency _____ MHz

Spectrum analyzer:

Bandwidth _____ kHz

Sweep width _____ MHz Sweep rate _____ Hz

Comments _____

_____

_____

NOTE: Each vertical and horizontal reticle should be calibrated either with an attached calibrated curve or by scaling the photograph.

FIGURE 15. *Sample transmitter closed system spurious emission data form B.*

Pulsed
Nonpulsed

Date _____

Coax
Waveguide

Frequency		Indent.	Sig. gen. output (dBm)	Losses (dB)	P.S.L.[1] (dBm/kHz)
Xmtr. tuned (MHz)	Spurious (MHz)				

[1]Power spectral level.

FIGURE 16. *Sample transmitter closed system spurious emission data form C.*

Pulsed
Nonpulsed

Coax
Waveguide

Equipment under test

Xmtr nomenclature _____

Type _____ Serial No. _____

Output tube _____

Type _____ Serial No. _____

Pwr. out. _____ dBm Avg. _____ dBm peak

Modulation _____

Far field distance _____ Ft. _____ Meters

Significant control positions _____

_____

_____

Test equipment

Spectrum analyzer used _____, MDS _____ dBm

3 dB resolution BW _____ kHz CW BW _____ kHz

Test antenna: Type _____ Polarity _____

Cable: Type _____ Length _____ Meters

Significant control positions _____

_____

_____

Test information

Radar site elevation _____ Ft. MSL

Test site elevation _____ Ft. MSL

Antenna height _____ Ft.

Measurement distance _____

_____

Unusual terrain features or man made objects _____

_____

FIGURE 17. *Sample transmitter open field spurious emission data form A.*

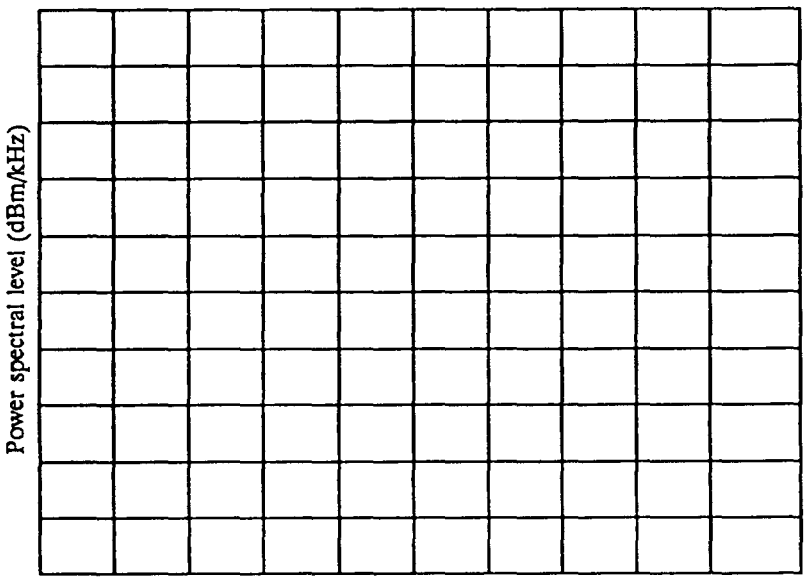

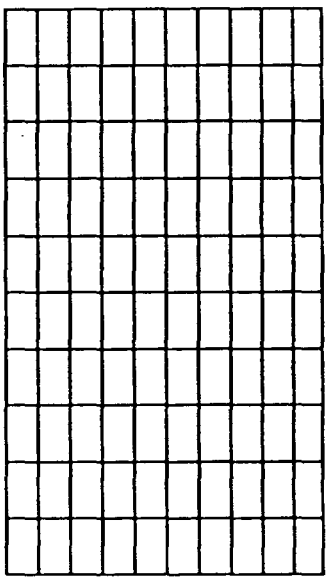

Photo No. _____ Date _____

Transmitter tuned frequency _____ MHz Peak power output _____ dBm

Spectrum analyzer:

Bandwidth _____ kHz

Sweep width _____ MHz Sweep rate _____ Hz

Comments _____

_____

_____

NOTE: Each vertical and horizontal reticle should be calibrated either with an attached calibrated curve or by scaling the photograph.

FIGURE 18. *Sample transmitter open field spurious emission data form B.*

Pulsed
Nonpulsed

Coax
Waveguide

Xmtr tuned freq _____ Peak power output _____ dBm
Nominal PW _____ Nominal PRF _____

Rise time _____ Fall time _____
Modulation _____ Compression ratio _____

Freq. (MHz)	Date/ time (24 hr base)	Test antenna orientation				S.G. S/A input[1] (dBm)	Measured cable lose		Attenu-ation inserted (dB)	Test ant.–radar ant. coupling (dB)	Power spectral level (dBm/kHz
		θ (deg)	ϕ (deg)	ω (deg)	Ht (m)		S.G.–S/A (dB)	Ant.–S/A (dB)			

[1]State type of signal used.

NOTE: Record received energy in units actually measured; if converted to other units, report raw data and calculations on separate sheet.

FIGURE 19. *Sample transmitter open field spurious emission data form C.*

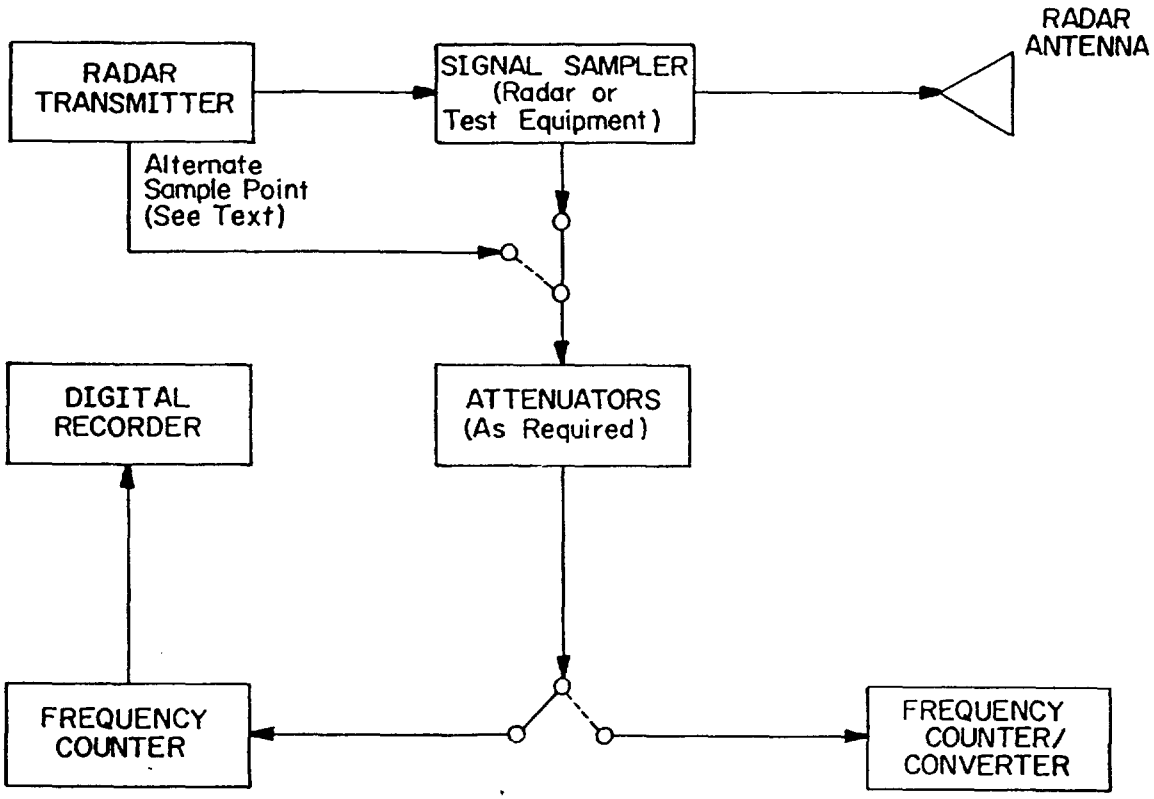

FIGURE 20. *Transmitter frequency stability measurement block diagram.*

TRANSMITTER MEASUREMENTS
CARRIER FREQUENCY STABILITY
INTERNALLY MODULATED PULSED TRANSMITTERS

Equipment under test

Transmitter nomenclature _____

Type _____ Serial No. _____

Tuned freq. _____ MHz

Configuration _____

Date and time equip. last operated _____

Significant control positions _____

_____

_____

_____

Test equipment

_____

_____

_____

_____

Frequency stability _____ Parts/million

Significant control positions _____

_____

_____

Test information

Point of signal injection _____

Point of measurement _____

_____

_____

_____

FIGURE 21. *Sample transmitter frequency stability data form A.*

TRANSMITTER MEASUREMENTS
CARRIER FREQUENCY STABILITY
INTERNALLY MODULATED PULSED TRANSMITTERS

Xmtr. nomenclature _____ Serial No. _____

Tuned frequency _____ MHz

Date	Time	Frequency (MHz)	Date	Time	Frequency (MHz)

FIGURE 22. *Sample transmitter frequency stability data form B.*

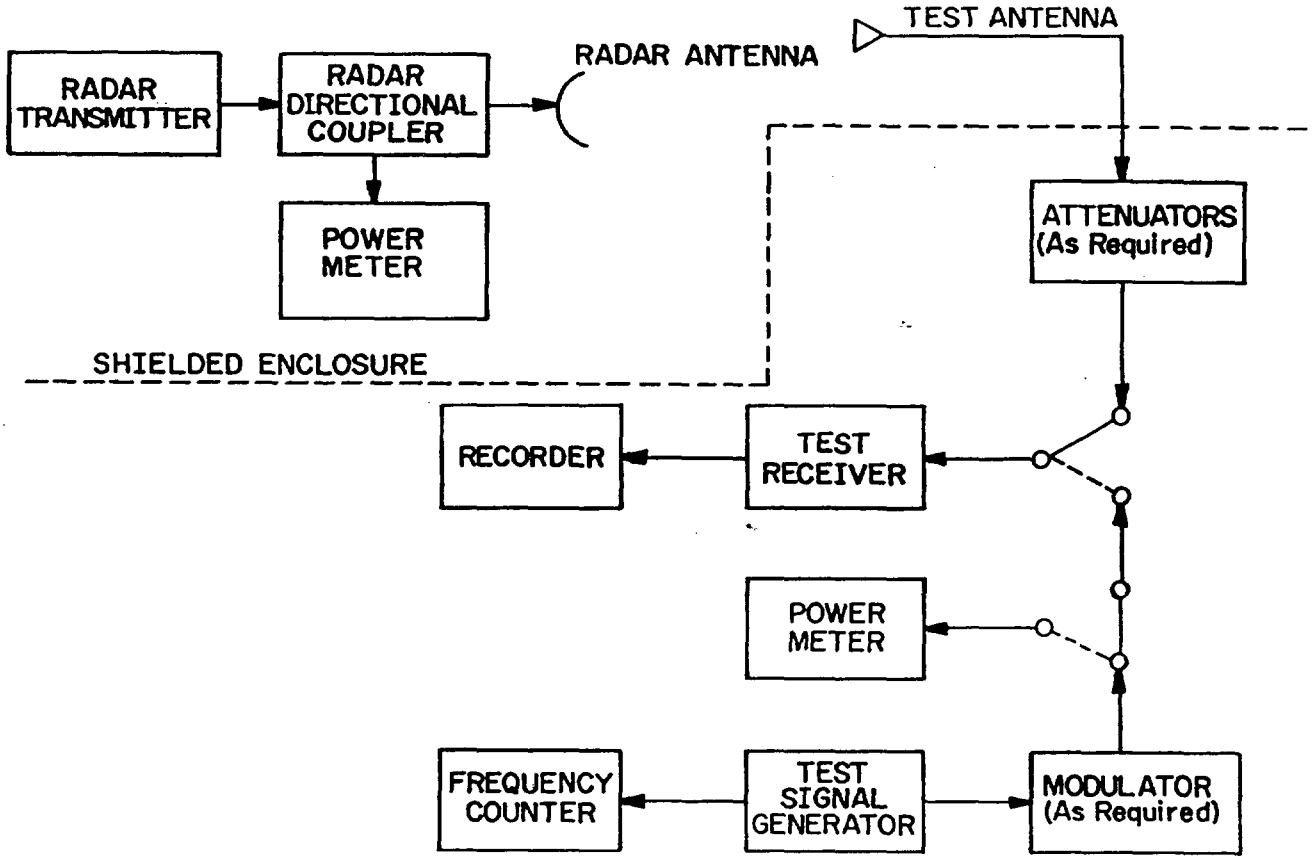

FIGURE 23. *Antenna pattern and median gain measurement block diagram.*

APPENDIX C

ANTENNA LOSE SUPPRESSION

Date _____ Time _____ Transmitter tuned frequency _____

Peak power output _____ dBM Pulsewidth _____ μs Pulse repetition freq. _____ pps

Test receiver _____ Bandwidth _____ MHz Attenuation inserted _____ dB

Antenna rotation speed _____ r/min Recorder speed _____

Test antenna orientation: θ _____ °, ϕ _____ °, ω _____ °, height _____ meters

Power density at test antenna _____ dBm/m^2

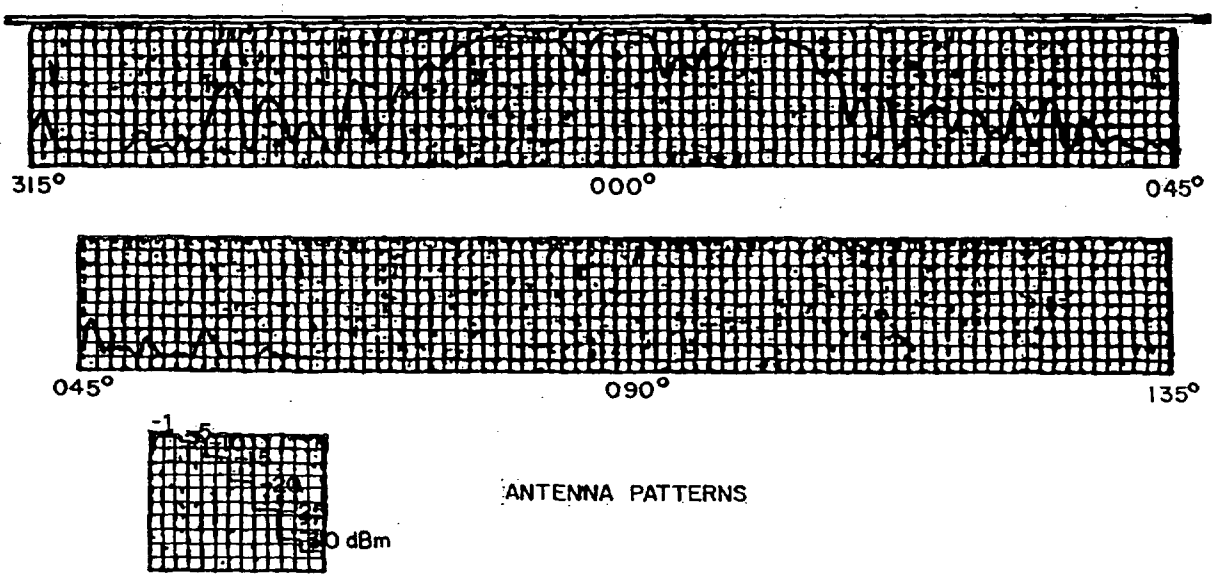

FIGURE 24. *Sample antenna pattern data format (sample antenna pattern).*

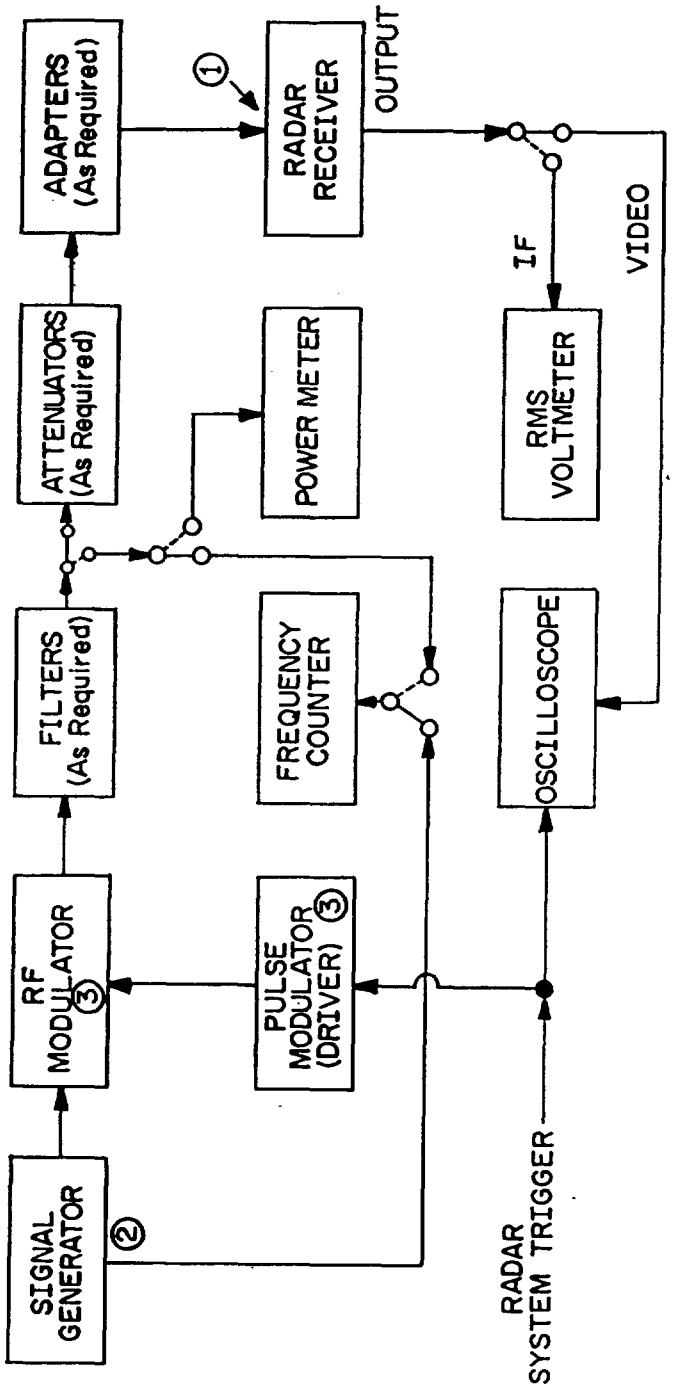

① Radar receiver input plane-of-reference.

② If signal generator has auxiliary RF output.

③ Not required if signal generator has internal pulse modulation capability or radar receiver is nonpulse.

FIGURE 25. Receiver response characteristics measurement block diagram ≤ 10 GHZ.

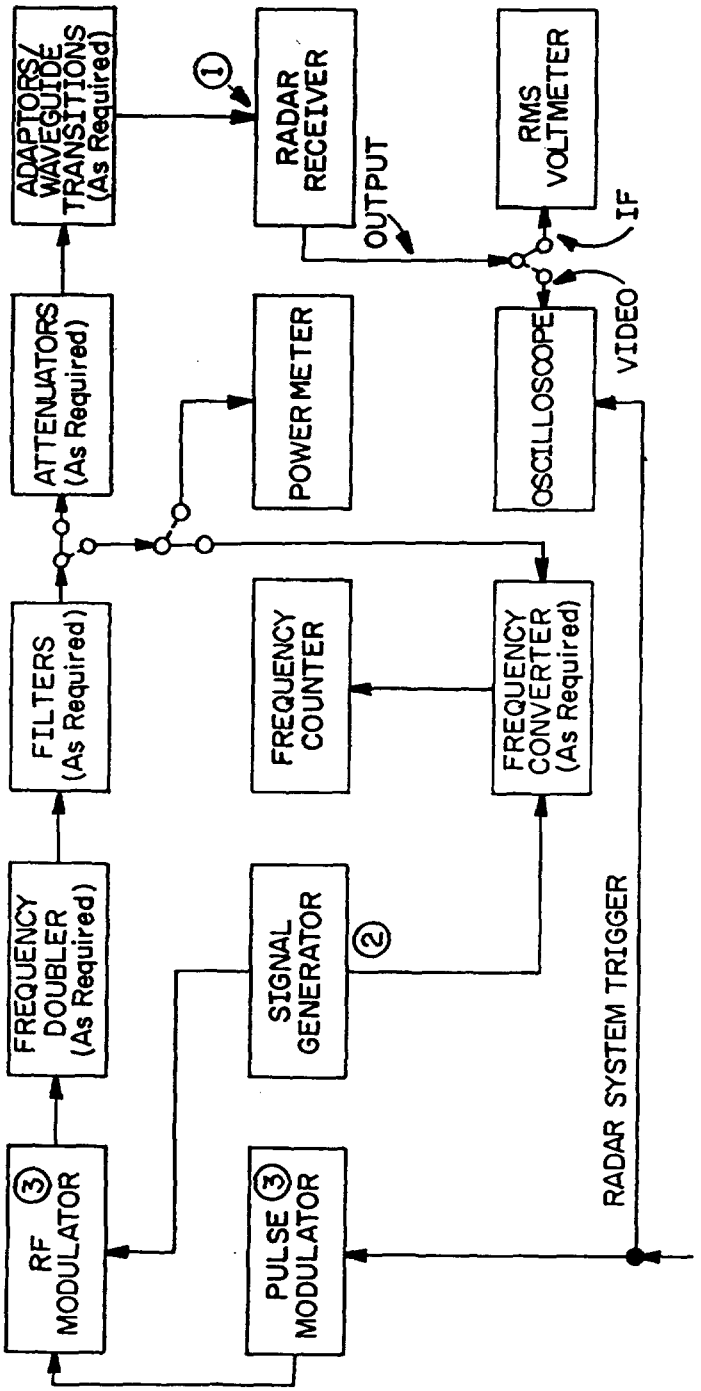

① Radar receiver input plane-of-reference.

② If signal generator has auxiliary RF output.

③ Not required if signal generator has pulse modulation capability or radar receiver is nonpulse.

FIGURE 26. Receiver response characteristics measurement block diagram > 10 GHz.

Equipment under test

Receiver nomenclature _____

Configuration _____ Serial No. _____

Tuned freq. _____ MHz MDS _____ dBm

Nominal characteristics:

PW _____ μsec PRF _____ pps

Sensitivity _____ dBm Noise figure _____

3 dB Bandwidth _____ kHz

Local osc. freq.

1. _____, Above, Below

2. _____, Above, Below

3. _____, Above, Below

Significant control positions _____

_____

_____

_____

Test equipment

_____

_____

_____

Significant control positions _____

_____

_____

Test information

Test pulse: PW _____ μsec PRF _____ pps

MDS w/test pulse _____ dBm

Point of signal injection _____

Measurement point _____

Std. response used _____

FIGURE 27. *Sample pulsed receiver data form.*

Equipment under test

Receiver nomenclature _____

Type _____ Serial No. _____

Tuning range or band _____

Nominal: Bandwidth _____ kHz

Sensitivity _____ dBm

Configuration _____

Significant control positions _____

_____

_____

_____

Test equipment

_____

_____

_____

Significant control positions _____

_____

_____

Test information

Test signal modulation:

Frequency _____ Hz, Percentage _____ %

Point of signal injection _____

Point of measurement _____

Std. response used _____

_____

_____

_____

FIGURE 28. *Sample nonpulsed receiver selectivity data form.*

Receiver nomenclature _____ Serial No. _____
Tuned frequency _____ MHz Date _____

Relative response (dB)	Absolute freq. (MHz)	$-\Delta f$ (kHz)	Absolute freq. (MHz)	$+\Delta f$ (kHz)	Bandwidth (kHz)

FIGURE 29. *Sample receiver selectivity data form A.*

APPENDIX C

Rcvr. nomenclature _____ Serial No. _____
Tuned frequency _____ MHz

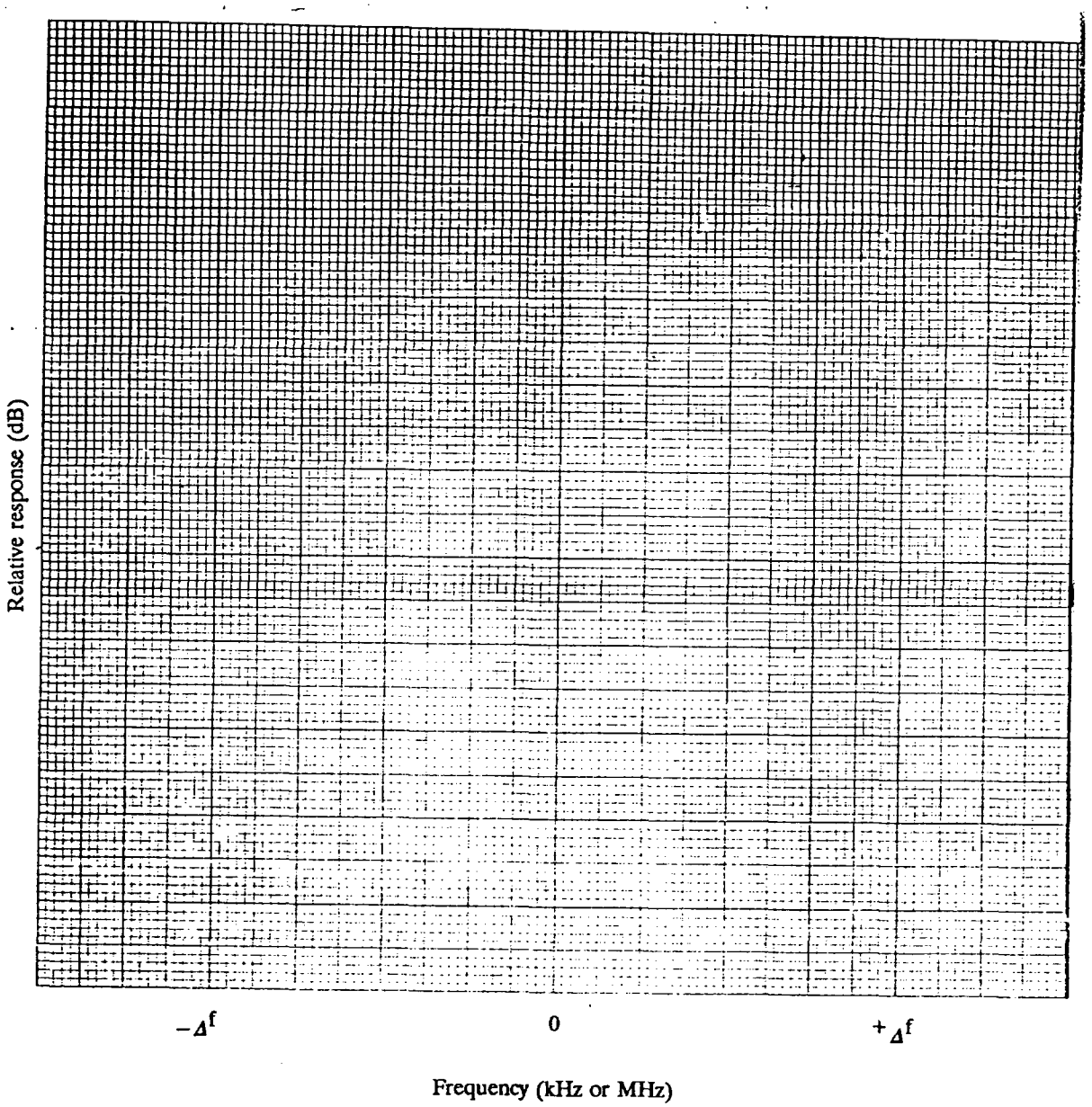

FIGURE 30. *Sample receiver selectivity data form B.*

Equipment under test

Receiver nomenclature _____

Type _____ Serial No. _____

Tuning band _____

LO freq.	Injection multiple	IF freq.
1. _____ MHz	1. _____	1. _____ MHz
2. _____ MHz	2. _____	2. _____ MHz
3. _____ MHz	3. _____	3. _____ MHz

Significant control positions _____

_____

_____

_____

Test equipment

_____

_____

_____

Significant control positions _____

_____

_____

Test information

Test signal modulation:

Frequency _____ Hz Percentage _____ %

or PW _____ μsec PRF _____ pps

Point of signal injection _____

Point of measurement _____

Std. response used _____

_____

_____

_____

FIGURE 31. *Sample receiver spurious response data form A.*

Receiver nomenclature _____ Serial No. _____

Tuned frequency _____ MHz Date _____

Measured LO frequency (1) _____ MHz (2) _____ MHz (3) _____ MHz

Injection multiple (1) _____ (2) _____ (3) _____

IF frequency (1) _____ MHz (2) _____ MHz (3) _____ MHz

Spurious frequency (MHz)	Sig. gen. output (dBm)	Atten. SG-Rcvr (dB)	Power input (dBM)	Mixer identification									Response
				First			Second			Third			
				P	Q	Sign	P	Q	Sign	P	Q	Sign	

FIGURE 32. *Sample receiver spurious response data form B.*

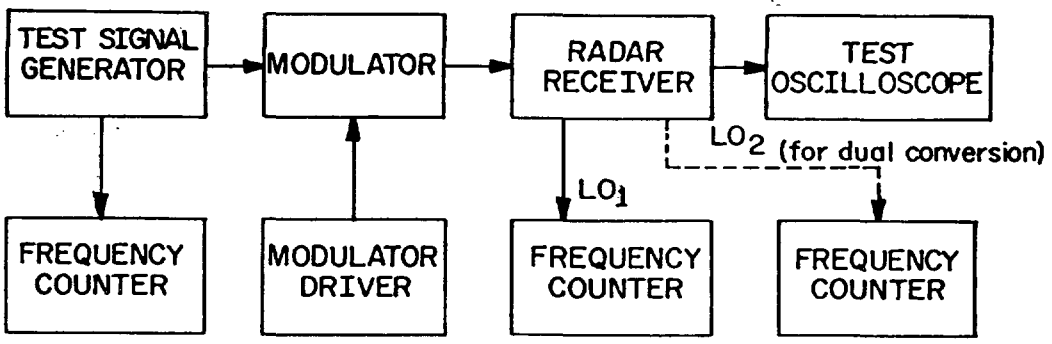

FIGURE 33. *Receiver tunability and frequency stability measurement block diagram.*

Equipment under test

Receiver nomenclature _____

Type _____ Serial No. _____

Tuning range or band _____ MHz

Nominal sensitivity _____ dBm

3 dB Bandwidth _____ kHz

Configuration _____

Significant control positions _____

_____

_____

_____

Test equipment

_____

_____

_____

Significant control positions _____

_____

_____

_____

Test information

Test signal modulation:

Frequency _____ Hz Percentage _____ %

or PW _____ μsec PRF _____ pps

Point of signal injection _____

Point of measurement _____

Std. response used _____

_____

_____

_____

FIGURE 34. *Sample receiver tunability and frequency data form.*

Receiver nomenclature _____ Serial No. _____
Test signal modulation _____ Date _____

Tuned frequency (MHz)	Sig. gen. frequency (MHz)	Sig. gen. power (dBm)	Attenuation inserted and cable loss (dB)	Coupling loss (dB)	Power input (dBm)

FIGURE 35. *Sample receiver tunability data form.*

Receiver nomenclature _____ Serial No. _____

Tuned frequency _____ MHz Date _____

No. 1 generator frequency _____ MHz Turn-on time _____

Time	No. 2 generator frequency (MHz)	Frequency tolerance (parts/million)	Time	No. 2 generator frequency (MHz)	Frequency tolerance (parts/million)

FIGURE 36. *Sample frequency stability data form.*

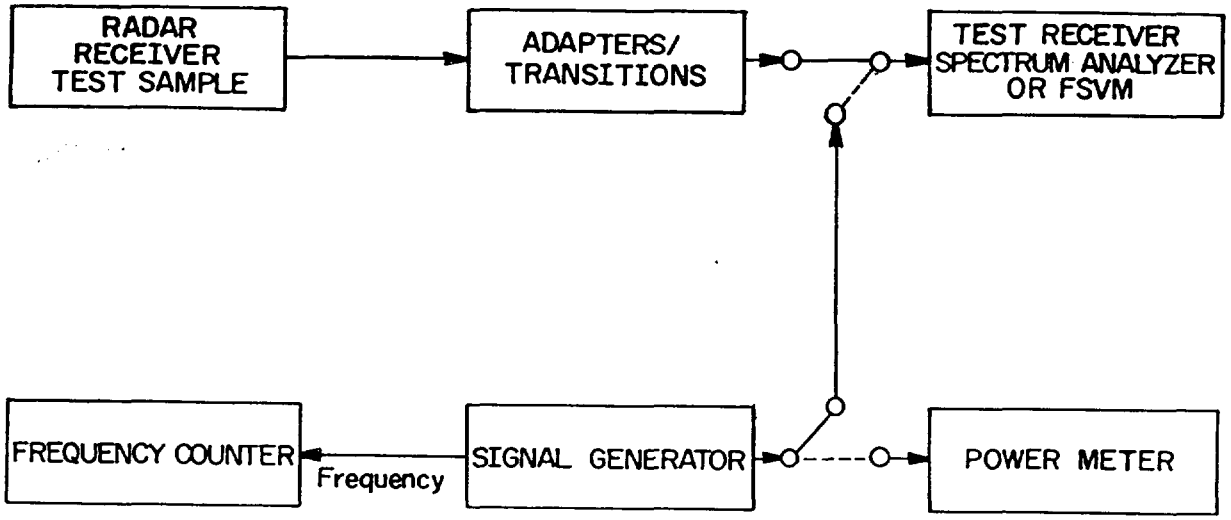

FIGURE 37. *Receiver oscillator radiation measurement block diagram.*

Receiver nomenclature _____ Serial No. _____

Tuned frequency _____ MHz Date _____

LO frequency _____ MHz

Radiated frequency	Frequency identification	Sig. gen. output (dBm)	Adapter attenuation (dB)	Power output (dBm)

FIGURE 38. *Sample receiver oscillator radiation data form B.*

Equipment under test

Receiver nomenclature _____

Type _____ Serial No. _____

Tuning range or band _____

Configuration _____

Significant control positions _____

_____

_____

_____

Test equipment

_____

_____

_____

Significant control positions _____

_____

_____

Test information

Point of signal injection _____

Point of measurement _____

_____

_____

_____

_____

FIGURE 39. *Sample receiver oscillator radiation data form A.*

STANDARDIZATION DOCUMENT IMPROVEMENT PROPOSAL

INSTRUCTIONS

1. The preparing activity must complete blocks 1, 2, 3, and 8. In block 1, both the document number and revision letter should be given.
2. The submitter of this form must complete blocks 4, 5, 6, and 7.
3. The preparing activity must provide a reply within 30 days from receipt of the form.

NOTE: This form may not be used to request copies of documents, nor to request waivers, or clarification of requirements on current contracts. Comments submitted on this form do not constitute or imply authorization to waive any portion of the referenced document(s) or to amend contractual requirements.

I RECOMMEND A CHANGE:	1. DOCUMENT NUMBER	2. DOCUMENT DATE (YYMMDD)
	MIL-STD-469A	2 DECEMBER 1991

3. DOCUMENT TITLE

RADAR ENGINEERING DESIGN REQUIREMENTS, ELECTROMAGNETIC COMPATIBILITY

4. NATURE OF CHANGE *(Identify paragraph number and include proposed rewrite, if possible. Attach extra sheets as needed.)*

5. REASON FOR RECOMMENDATION

6. SUBMITTER

a. NAME (Last, First, Middle Initial)	b. ORGANIZATION	
c. ADDRESS (Include Zip Code)	d. TELEPHONE (Include Area Code) (1) Commercial (2) AUTOVON (If applicable)	7. DATE SUBMITTED (YYMMDD)

8. PREPARING ACTIVITY

a. NAME	b. TELEPHONE (Include Area Code)	
COMMANDER NAVAL SEA SYSTEMS COMMAND (SEA 55Z3)	(1) Commercial (703) 602-6020	(2) AUTOVON (AV) 332-6020
c. ADDRESS (Include Zip Code) WASHINGTON, DC 20362-5101	IF YOU DO NOT RECEIVE A REPLY WITHIN 45 DAYS, CONTACT: Defense Quality and Standardization Office 5203 Leesburg Pike, Suite 1403, Falls Church, VA 22041-3466 Telephone (703) 756-2340 AUTOVON 289-2340	