SD-TR-81-32

HAZARDOUS WASTE INVENTORY AND DISPOSAL ASSESSMENT FOR THE SPACE SHUTTLE PROJECT

VOLUME II. TREATMENT AND DISPOSAL ALTERNATIVES

FINAL REPORT

SCS ENGINEERS
4014 LONG BEACH BOULEVARD
LONG BEACH, CALIFORNIA 90807

JULY 1981

Reproduced From
Best Available Copy

Approved for public release; distribution unlimited.

PREPARED FOR
DEPARTMENT OF THE AIR FORCE
HQ SPACE DIVISION (DEV)
P.O. BOX 92960, WORLDWAY POSTAL CENTER
LOS ANGELES, CALIFORNIA 90009

20011011 162

7102-01- 0147

PREFACE

This report was prepared by SCS Consulting Engineers, Inc., Long Beach, California 90807. This Hazardous Waste inventory and Disposal Assessment was initiated by the Air Force to meet the requirements of the Resource Conservation and Recovery act of 1976 as amended in 40 CFR 261 & 264 May 19, 1980, and the California Administrative Code, title 22 Division 4. The report will be used as a reference document to the 1978 Space Shuttle Supplement 1. It will also be used for hazardous waste reporting to EPA/California, for hazardous waste management planning, and for engineering design concepts for the STS.

The report is in three volumes. Volume I is an inventory of hazardous wastes likely to be generated by the West Coast STS project. Volume II is an analysis of recycle, treatment, and disposal options for managing the projected STS Wastes. Volume III is an appendix with reference material for Volume II.

This work was accomplished between September 1980 and June 1981. Mr. John R. Edwards, Headquarters Space Division was the Project Officer.

This report has been reviewed by the office of Public Affairs (PA) and is releasable to the National Technical Information Service (NTIS). At the NTIS it will be available to the general public, including foreign nations.

This report has been reviewed and is approved for publication.

JOHN R. EDWARDS
Environmental Protection Scientist

R.C. WOOTEN JR, Lt/Col, USAF, BSC
STS Environmental Program Manager

RAPHAEL O. ROIG
Chief, Environmental Planning Division

JOHN D. PEARMAN, Colonel, USAF
Directorate of Civil Engineering

SECURITY CLASSIFICATION OF THIS PAGE (When Data Entered)

REPORT DOCUMENTATION PAGE		READ INSTRUCTIONS BEFORE COMPLETING FORM
1. REPORT NUMBER SD-TR-81-32	2. GOVT ACCESSION NO.	3. RECIPIENT'S CATALOG NUMBER
4. TITLE (and Subtitle) HAZARDOUS WASTE INVENTORY AND DISPOSAL ASSESSMENT FOR THE SPACE SHUTTLE PROJECT, Volume II. Hazardous Waste Treatment and Disposal Alternatives		5. TYPE OF REPORT & PERIOD COVERED Final Report for Period 12 Nov. 1980-24 July 1981
		6. PERFORMING ORG. REPORT NUMBER 18017
7. AUTHOR(s)		8. CONTRACT OR GRANT NUMBER(s) F04 701-80-C-0106
9. PERFORMING ORGANIZATION NAME AND ADDRESS SCS Engineers 4014 Long Beach Boulevard Long Beach, California 90807		10. PROGRAM ELEMENT, PROJECT, TASK AREA & WORK UNIT NUMBERS 64411F
11. CONTROLLING OFFICE NAME AND ADDRESS SD/DEV Los Angeles AFS, P.O. Box 92960 WWPC Los Angeles, California 90009		12. REPORT DATE July 24, 1981
		13. NUMBER OF PAGES 183
14. MONITORING AGENCY NAME & ADDRESS(if different from Controlling Office) Approved for public release; distri		15. SECURITY CLASS. (of this report) Unclassified
		15a. DECLASSIFICATION/DOWNGRADING SCHEDULE

16. DISTRIBUTION STATEMENT (of this Report)

Approved for public release; distribution unlimited.

17. DISTRIBUTION STATEMENT (of the abstract entered in Block 20, if different from Report)

18. SUPPLEMENTARY NOTES

Available in DTIC

19. KEY WORDS (Continue on reverse side if necessary and identify by block number)

Civil Engineering
Space Shuttle
Environmental Planning
Hazardous Waste
Vandenberg Air Force Base

20. ABSTRACT (Continue on reverse side if necessary and identify by block number)

This study develops feasible alternatives for treatment/recovery/disposal of the wastes generated by the STS-VAFB ground operations. Similar wastes from the STS inventory are grouped into treatment categories. Descriptions and feasibility assessments of the alternatives for each treatment category are provided along with applicable regulatory constraints. Estimates of capital costs (in 1980 and 1985 dollars) and annual operating costs for each year of the project (1985 through 1994) are developed for each treatment/disposal method.

DD FORM 1 JAN 73 1473 EDITION OF 1 NOV 65 IS OBSOLETE

SECURITY CLASSIFICATION OF THIS PAGE (When Data Entered)

Only proven methods using existing available technologies are considered, although promising experimental or proposed alternatives are also mentioned. Disposal alternatives investigated include on-site landfilling and ponding, off-site landfilling, and one-site incineration. Attention is given to the site investigation aspects of on-site Class I landfilling and surface impoundments.

Off-site land disposal of wastes is examined in terms of Class I landfill site availability, disposal fees, and associated transportation costs. This is a viable option for many STS wastes. Waste management support functions are described with emphasis on segregation of chemically incompatible wastes, storage containers, collection and transfer of the wastes, and volume reduction of solid wastes. A conceptual design with cost estimates is given for an on-site storage/transfer facility. This facility could provide a convenient focal point for overall management of STS-VAFB hazardous wastes, and is a recommended element for the management scheme.

The selected technologies/methods are combined into seven overall waste management schemes. These scenarios are discussed with respect to engineering factors, and are compared in terms of their respective capital and total project costs.

CONTENTS

Section | Page

Figures....iii
Tables....v

I EXECUTIVE SUMMARY....1

1. Introduction....1
2. Grouping of Wastes....1
3. Treatment/Recovery/Disposal Options....3
4. Support Functions....7
5. Transport for Off-Site Disposal....8
6. Waste Management Schemes....9
7. Comparative Cost Estimates for Waste Management Schemes....13
8. Discussion of Waste Management Schemes....14
9. Conclusions....17

II INTRODUCTION....18

1. Background....18
2. Purpose and Report Organization....20

III HAZARDOUS WASTE CHARACTERIZATION AND TREATMENT/ REUSE/DISPOSAL OPTIONS....26

1. Introduction....26
2. Treatment Categories....27
3. Treatment/Recovery/Disposal Options....30

IV HAZARDOUS WASTE TREATMENT OPTIONS....37

1. Introduction....37
2. Governing Regulations....38
3. Category 1: Freon Wastes....39
4. Category 2: Hypergolic Fuel Wastes and Hypergolic Fuel-Contaminated Water and Alcohol....39
5. Category 3: Group I Hydrocarbon Wastes....51
6. Category 4: Bilge Wastes....51
7. Category 5: Group II Hydrocarbon Wastes....53
8. Category 8: Acids, Bases, and Aqueous Solutions Containing Metal Ions....53
9. Category 9: SRB Rinse Waters....54

CONTENTS (continued)

Section | Page

10. Category 10: Acid and Base Solutions Not Contaminated with Metal Ions.....58
11. Category 11: Fuel Vapor Scrubber Wastes....65
12. Categories 13 and 14: Combustible and Noncombustible Solid Wastes.....69
13. Category 15: Miscellaneous Wastewaters.....69

V HAZARDOUS WASTE DISPOSAL OPTIONS.....76

1. Introduction.....76
2. On-Site Disposal of Wastes by Landfilling and Ponding.....76
3. Off-Site Land Disposal of Hazardous Wastes.....104
4. Off-Site Transport.....119
5. Incineration.....123

VI SUPPORT FUNCTIONS.....136

1. Introduction.....136
2. Waste Storage at Source.....136
3. Loading and Unloading of Hazardous Wastes.....145
4. Waste Collection.....145
5. Storage/Transfer Station.....145
6. Solid Waste Volume Reduction.....148
7. Storage/Transfer Station Operation.....155

VII WASTE MANAGEMENT SCHEMES.....156

1. Introduction.....156
2. Development of Schemes 1 Through 4.....156
3. Comparative Cost Estimates.....162
4. Discussion.....172

GLOSSARY.....175

BIBLIOGRAPHY.....181

APPENDICES.....Volume III

FIGURES

Number		Page
1	STS-VAFB hazardous waste generation per launch by treatment category	2
2	Class I disposal facilities near VAFB	6
3	Unit costs for off-site land disposal of hazardous waste by disposal facility and waste type	6
4	Waste Management Scheme 1: On-site treatment/ off-site land disposal/on-site incineration	10
5	Waste Management Scheme 2: On-site treatment/ on-site landfilling/no incineration	10
6	Waste Management Scheme 3: On-site treatment/ on-site landfilling/on-site incineration	11
7	Waste Management Scheme 4: On-site treatment/ off-site land disposal/no incineration	11
8	Environmental permit time requirements	16
9	Waste management program recommended for minimizing on-site construction	17
10	A model waste management system	19
11	Category 2 treatment options	42
12	Categories 3 and 5 treatment options	52
13	Category 8 treatment option	55
14	Category 9 treatment options	57
15	Category 10 treatment options	63
16	Category 11 treatment option	67
17	Category 15 treatment options	70
18	General stratigraphic column of Vandenberg AFB, Santa Barbara County	82

FIGURES (continued)

Number		Page
19	Geologic profile	83
20	Artist concept of on-site landfill and pond	89
21	Landfill access road	90
22	Landfill construction	94
23	Liner anchorage	95
24	Double leachate collection system	97
25	Location of hazardous waste disposal sites	107
26	Incineration schematic	133
27	General layout of hazardous waste storage/ transfer facility area	149
28	Detailed layout of hazardous waste storage/ transfer facility	150
29	Waste Management Scheme 1: On-site treatment/ off-site land disposal/on-site incineration	157
30	Waste Management Scheme 2: On-site treatment/ on-site landfilling/no incineration	158
31	Waste Management Scheme 3: On-site treatment/ on-site landfilling/on-site incineration	159
32	Waste Management Scheme 4: On-site treatment/ off-site land disposal/no incineration	160

TABLES

Number		Page
1	Feasibility of Treatment, Recovery, and Disposal Options for STS-VAFB Hazardous Waste Categories	3
2	Waste Treatment Options for Discharge	4
3	Solvent Reclaiming Operations in California	5
4	Transportation Costs (1980 Dollars)	9
5	Comparison of Waste Management Schemes	9
6	Cost Estimates for STS Hazardous Waste Management Schemes (VAFB and Port Hueneme)	14
7	Number of Permits/Approvals Required for Each Waste Management Scheme	15
8	Civil and Criminal Penalties for Failure to Comply with Applicable Federal Regulations	24
9	STS-VAFB Annual Hazardous Waste Generation by Treatment Category	28
10	Summary of Treatment and Disposal Options, STS-VAFB Hazardous Wastes	31
11	Solvent Reclaiming Operations in California	40
12	Value of Recoverable Wastes	41
13	Category 2b. Chemical Oxidation, Option 1	45
14	Category 2b. Chemical Oxidation, Option 2	46
15	Category 2b. Aerated Lagoon	47
16	Category 2b. Activated Carbon	48
17	Cost Estimate for Evaporation Pond for Treated 2b, 10b, and 10c Wastes	50
18	Category 8. Chemical Treatment	56

TABLES (continued)

Number		Page
19	Category 9. Biological Treatment	59
20	Category 9. Evaporation Ponds	60
21	Category 9. Granular Media Filter	61
22	Categories 10a and 10b. Chemical Treatment	64
23	Category 10c. Neutralization	66
24	Category 11. Chemical Treatment	68
25	Category 15. Filtration and Activated Carbon, Option 1	71
26	Category 15. Filtration and Activated Carbon, Option 2	72
27	Category 15. Filtration and Activated Carbon, Option 3	73
28	Category 15. Aerated Lagoon and Filtration	75
29	On-Site Land Disposal Options	87
30	Capital Cost Estimates for the Example Landfill	99
31	O&M Cost Estimate for the Example Landfill	100
32	Capital Cost Estimates for the Example Impoundment	103
33	O&M Cost Estimates for the Example Surface Impoundment	105
34	Hazardous Waste Disposal Sites in California and Nevada	106
35	Waste Management Options for Off-Site Disposal	108
36	Description of Class I Disposal Facilities at Casmalia, Kettleman, and West Covina	109
37	Unit Costs for Off-Site Land Disposal of Hazardous Wastes Generated by the STS Program, 1980 Dollars	110
38	Summary of Costs for Off-Site Land Disposal of STS Hazardous Wastes, 1980 Dollars	112

TABLES (continued)

Number		Page
39	Sample Calculation for Determining Costs for Off-Site Land Disposal	114
40	Total Cost for Off-Site Disposal, 1985 (1980 Dollars)	116
41	Projected Costs to Dispose of Vandenberg STS Hazardous Wastes at Off-Site Class I Facilities, 1985 Through 1994 (Thousand Dollars)	117
42	Projected Costs to Dispose of Port Hueneme STS Hazardous Wastes at Off-Site Class I Facilities, 1985 Through 1994 (Thousand Dollars)	118
43	Unit Costs to Transport Hazardous Wastes (1980 Dollars)	120
44	Transportation Rates (1980 Dollars)	122
45	Sample Calculation - Cost of Off-Site Transportation	124
46	Projected Costs for Transporting VAFB Hazardous Wastes to Off-Site Class I Disposal Facilities, 1985 Through 1994 (Thousand Dollars)	126
47	Projected Costs for Transporting Port Hueneme Hazardous Wastes to Class I Disposal Facilities, 1985 Through 1994 (Thousand Dollars)	127
48	Summary of Transportation and Disposal Costs for the STS Project, 1985 - 1994 (Million Dollars)	128
49	Commercial Incineration Costs for Combustible Wastes	130
50	Capital and O&M Costs for Different Thermal Waste Processing Alternatives (Dollars)	132
51	Hazardous Waste System Selection Criteria	134
52	List of Potentially Noncompatible Wastes	137
53	Selected List of Commonly Used Hazardous Waste Storage Methods	140

TABLES (continued)

Number		Page
54	Selected List of Hazardous Wastes and Corresponding Commonly Accepted Storage, Handling and Transportation Methods	142
55	Selected List of Commonly Used Hazardous Waste Loading and Unloading Methods	146
56	Comparison of Air Force Versus Contractor Collection Costs Per Year	147
57	Projected Capital Costs of On-Base Hazardous Waste Transfer Facility	151
58	Projected O&M Cost for On-Base Storage/Transfer Facility	152
59	Conceptual Design Compactor Facility Capital Cost	154
60	Scheme 1 Cost Estimate	163
61	Scheme 2 Cost Estimate	165
62	Scheme 3 Cost Estimate	167
63	Scheme 4 Cost Estimate	169
64	Cost Estimates for STS Hazardous Waste Management Schemes (VAFB and Port Hueneme)	171
65	Comparison of Total Project Costs for Transportation and Disposal to Alternative Class I Land Disposal Facilities	173

SECTION I

EXECUTIVE SUMMARY

1. INTRODUCTION

This report is developed to assess treatment/recovery/disposal options for wastes generated by the STS-VAFB program. Based on the need to manage these wastes in a safe, legal, and environmentally sound manner, the objectives of the study presented in this report are as follows:

- Grouping of similar wastes into treatment categories.
- Feasibility and economic assessments of different treatment/recovery options, and identification of the applicable regulatory constraints.
- Feasibility and economic assessments of different disposal options, and overview of the related regulatory aspects.
- Analyses of the support functions for treatment/recovery/disposal alternatives.
- Formulation of different management schemes by combining the above elements and developing comparative cost estimates.

2. GROUPING OF WASTES

Many STS wastes are similar in terms of chemical and physical properties, and can be readily mixed and treated and/or disposed of together. In developing treatment categories for the STS-VAFB, categories already defined for Kennedy Space Center (KSC) are used to the extent possible to facilitate comparisons between the two areas. The twelve treatment categories are:

- Category 1: Recoverable Freon Wastes.
- Category 2: Hypergolic Fuels (2a) and Hypergolic Fuel-Contaminated Water and Alcohol (2b).
- Category 3: Group I Hydrocarbon Wastes.
- Category 4: Bilge Water and Water Contaminated with Oil.

- Category 5: Group II Hydrocarbon Wastes.
- Category 8: Acids, Bases, and Aqueous Solutions Contaminated with Metal Ions.
- Category 9: Solid Rocket Booster Rinse Water Wastes.
- Category 10: Acidic and Basic Wastes Which Contain No Significant Metal Ions (10a), Oxidizer Wastes (10b), and Oxidizer-Contaminated Wastewaters (10c).
- Category 11: Fuel Vapor Scrubber Wastes (essentially the same as Category 2b, due to the change in the type of scrubbers used).
- Category 13: Combustible Solids.
- Category 14: Noncombustible Solids.
- Category 15: Miscellaneous Wastewaters.

Categories 6, 7, and 12 are specific for KSC operations; Categories 13, 14, and 15 are specific for STS-VAFB.

The total baseline quantities of wastes generated per launch in each treatment category for the space shuttle program at VAFB are depicted in Figure 1.

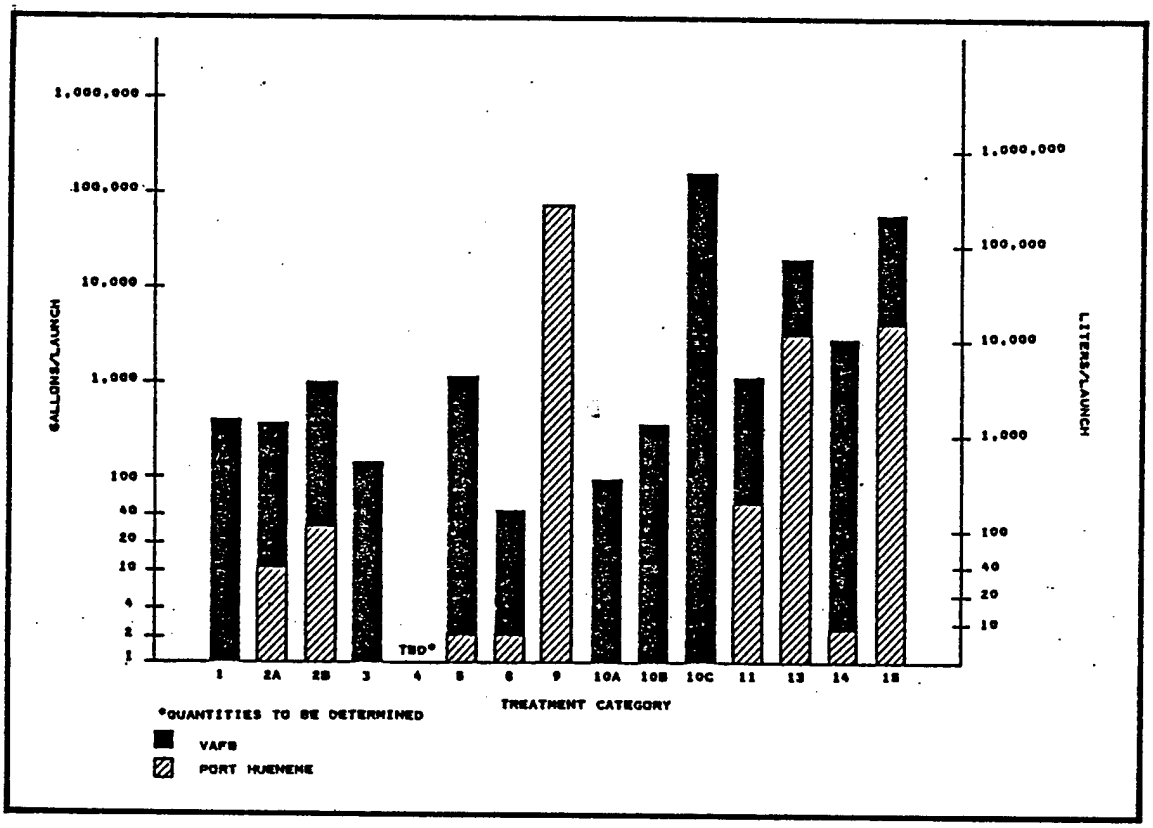

Figure 1. STS-VAFB hazardous waste generation per launch by treatment category.

3. TREATMENT/RECOVERY/DISPOSAL OPTIONS

Table 1 compares the feasibilities of the treatment, recovery, and disposal options available for each STS-VAFB hazardous waste category. Only methods deemed technically feasible at this time are considered in this report. Such new methods as encapsulation, microwave decomposition, and electrophoresis may become viable before 1994, but are not sufficiently developed at this time to be considered in this report. Some conventional methods, such as reverse osmosis, trickling filters, activated sludge, and wastewater distillation, are eliminated, because the nature of the wastes limits their applicability.

TABLE 1. FEASIBILITY OF TREATMENT, RECOVERY AND DISPOSAL OPTIONS FOR STS-VAFB HAZARDOUS WASTE CATEGORIES.

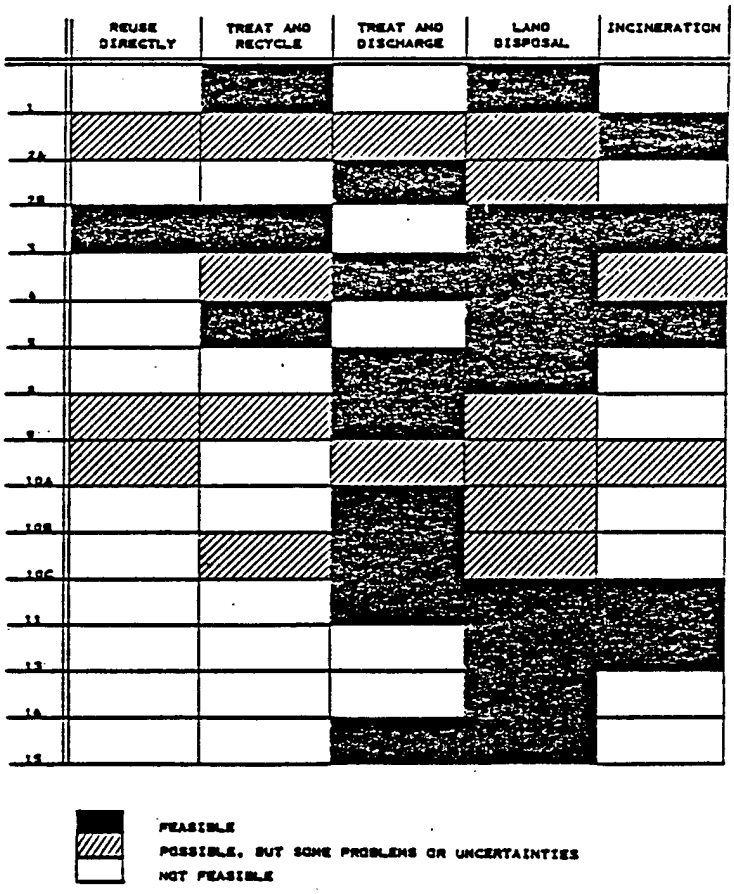

a. Waste Treatment for Discharge

Each treatment category of hazardous waste is discussed in terms of existing or projected requirements for treatment. Special attention is given to determining both the ability of the treatment system to comply with the current environmental laws and standards, and to meet the demands placed upon it during the

shuttle program. Table 2 shows treatment systems for each waste category that are considered directly applicable and cost-effective prior to discharge to an evaporation pond, POTW, or the ocean.

TABLE 2

WASTE TREATMENT OPTIONS FOR DISCHARGE

Category	Treatment Option
1	None (discharge not an alternative)
2a	Chemical oxidation
2b	Neutralization/chemical oxidation; aerated lagoons; activated carbon filtration
3	None (treatments not cost-effective)
4	Oil separation with biological treatment of separated water in an oxidation ditch
5	None (treatments not cost-effective)
8	Neutralization/precipitation
9	Aerated lagoon or oxidation ditch; granular media filtration
10a & 10b	Chemical oxidation/neutralization
10c	Neutralization
11	Neutralization/chemical oxidation
13	None (discharge not possible for solids)
14	None (discharge not possible for solids)
15	Filtration or settling; aerated lagoon; chemical oxidation

b. Waste Treatment for Reuse

Some of the hazardous wastes may be recycled. The following three groups of reuse/recovery are identified: (a) wastewater reuse; (b) oil recovery; and (c) solvent recovery.

Category 10c, quench water, is the largest volume waste stream produced by the space shuttle ground operations. Depending on the water quality needed for quench water, it might be possible to reuse the neutralized wastewater directly for a few cycles before fresh water is needed. If higher quality water is needed, the neutralized quench water could be passed through a deionizer before being pumped to storage.

Category 4, bilge wastes, is ocean vessel condensate water contaminated with sea water and oil. Once separated, the oil recovered can either be directly used for heating or further treated for other reuse.

Some wastes generated by the STS-VAFB ground operations are considered recyclable by the State of California, and the generator may be required to justify any intent to dispose without recycling. They are Categories 1, 2a, 3, and 5 (totaling 1,910 gallons per launch). Reclamation of these solvents can be accomplished on-site by distillation, or off-site by either a commercial solvent reclaimer or the manufacturer. Table 3 lists some of the major chemical reclamation companies in California, and depicts STS-VAFB waste chemicals presently acceptable for reclamation. The economics of recycling contaminated solvents varies depending on demand for the reclaimed product, purity and quantity of the waste solvent, and volume of the recovered fraction. The Air Force would be required to pay for solvents reclaimed for Air Force use. If the reclaimer intends to sell the purified product, the Air Force might be paid for the waste solvent.

TABLE 3

SOLVENT RECLAIMING OPERATIONS IN CALIFORNIA

	Category 1	Category 2a		Category 3	Category 5					
Solvent Reclaimer	Freon 400 gal/L*	Hydrazine 120 gal/L*	MMH 30 gal/L*	Heptane 350 gal/L*	Perchloro-ethylene 350 gal/L*	Methylene Chloride 350 gal/L*	Cellusolve Acetate 30 gal/L*	Methy Ethyl Ketone 30 gal/*	TCE/Freon Mixture 50 gal/L*	Misc. Solvent Mixtures 200 gal/L*
Baron-Blakeslee, Gardena	●				●	●			○	
Bayday Chemical Company, Santa Clara	●			○	○	●	○	○	○	○
Davis Chemical Company, Los Angeles	○			○	●	●	○	●	●	○
Environmental Recovery, Long Beach	○		●		●	●			○	○
Gold Shield Solvents, Los Angeles					●				●	
Oil and Solvents Process Company, Azusa	●			○	●	●	○	●	○	○
Zero Waste Systems, Oakland	●	○	○	○	●	●	○	○	○	○

* L = launch.

● Reclaimer pays for waste.

○ Reclaimer takes waste for free or purifies it for reuse for a fee.

□ Reclaimer does not accept waste.

c. Waste Disposal

Alternatives investigated for disposal/discharge of STS-VAFB hazardous wastes and/or effluents resulting from their treatment include on-site ponding, on- and off-site landfilling and incineration, discharge to POTW's, and ocean disposal.

(1) Landfilling and Ponding

The feasibility of constructing a Class I landfill and evaporation ponds at VAFB is discussed. Areas within VAFB boundaries with the greatest potential are identified according to the State of California requirements for siting of hazardous waste land disposal sites. Conceptual designs for an on-site Class I landfill and evaporation ponds are also presented, and a discussion on pertinent design factors, construction and operational features, and economic factors is included.

Casmalia, Kettleman, and West Covina are considered the three most likely off-site disposal sites. Long hauling distances render other sites economically less desirable. The location, acreage, and predicted lifetime for each of these sites are given in Figure 2. A comparison of the unit costs for disposal at each site is shown in Figure 3.

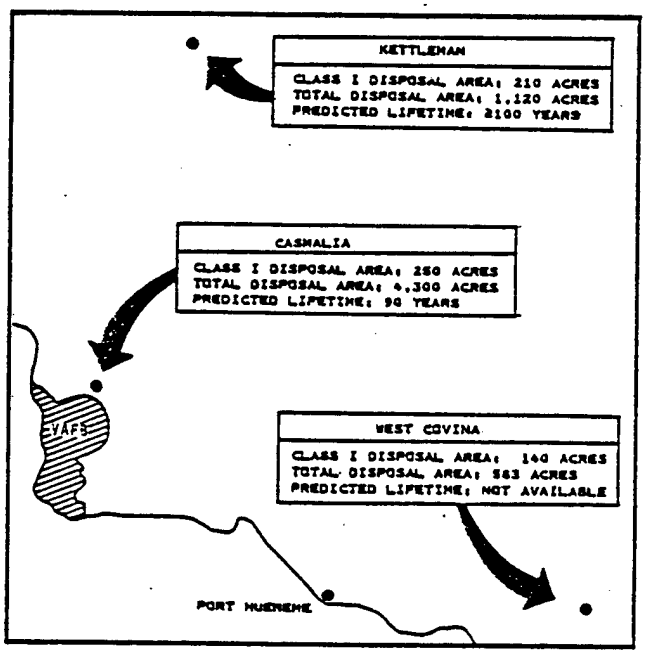

Figure 2. Class I disposal facilities near VAFB.

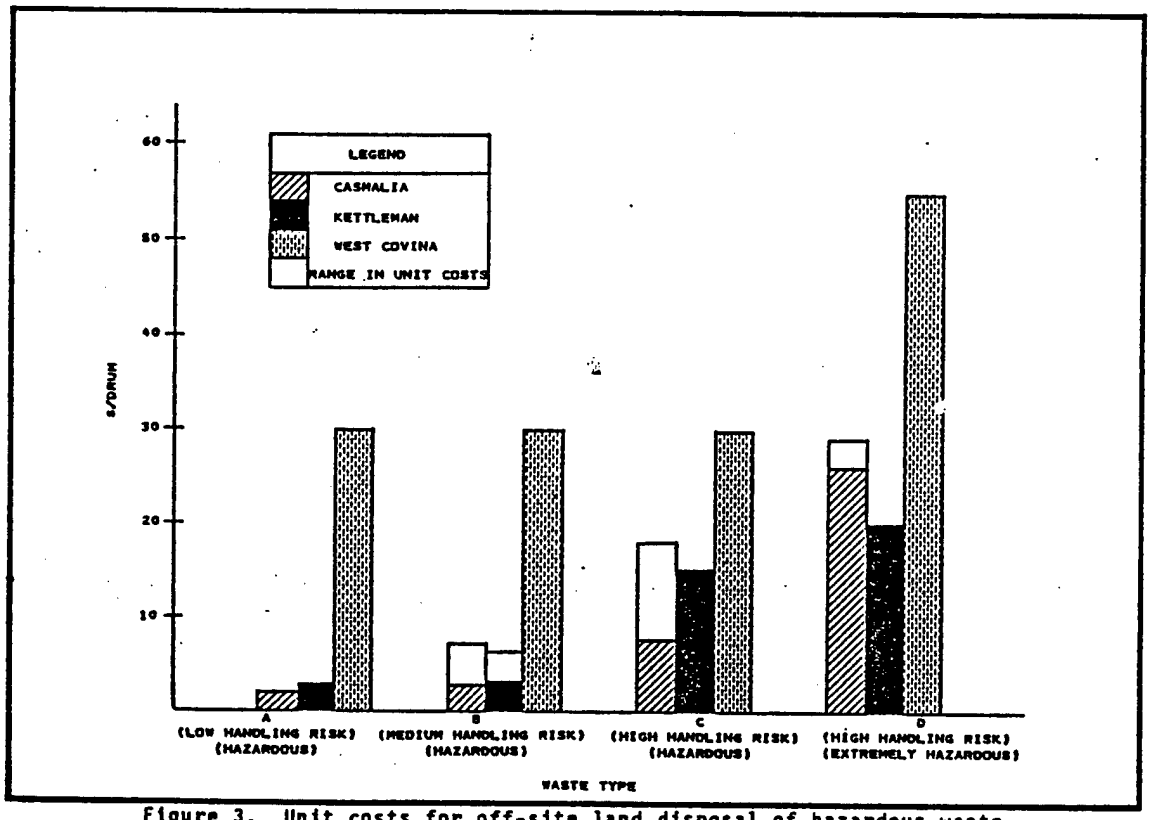

Figure 3. Unit costs for off-site land disposal of hazardous waste by disposal facility and waste type.

(2) Incineration

STS hazardous waste categories suitable for incineration are 2, 3, 5, 11 and 13. Category 13 is solid material. There are three alternative waste incineration strategies: (1) transport of baseline and contingency wastes off site to a commercial incineration facility; (2) installation of an on-site incineration facility for baseline wastes; and (3) installation of a dedicated on-site incineration facility for baseline and contingency wastes.

The nearest commercial waste incineration facility to VAFB is operated by Rollins Environmental Services, Inc., located near Houston, Texas, 1,500 miles from VAFB. A similar facility, to be located near Beatty, Nevada (300 miles from VAFB), has been proposed but may never be constructed.

The cost of incinerating waste products at commercial facilities is based on material characteristics, e.g., Btu content, handling properties, toxicity, etc. Due to the variability in waste composition, a laboratory analysis is performed on all incoming shipments to determine costs. Transport and facility charges for contingency wastes must be added to the total cost for waste incineration.

Several firms currently manufacture "package incineration systems" compatible with selected STS program wastes. The standard package consists of a feeding system, rotary kiln, afterburner chamber, air emission control device, exhaust fan, and stack. These systems are available in several standard capacities, ranging from approximately 0.02 to 1.5 tons per hour (as fed).

4. SUPPORT FUNCTIONS

On-site hazardous waste storage facilities, the pickup of these wastes and their delivery to the on-site storage/transfer station, and transfer and transport to treatment, recovery, and/or ultimate disposal sites are all necessary components of hazardous waste management.

a. Waste Storage at Source/Loading and Unloading/Collection

Segregation of incompatible wastes is very important. Commonly used methods for on-site storage of hazardous wastes prior to pickup and hauling to an on-site transfer station for treatment, recycling, and/or disposal are presented. Various categories and physical forms of hazardous waste suitable for containment, and commonly used methods for transferring waste materials from one vessel or vehicle to another are discussed.

b. Storage/Transfer Station

The operation of this facility should be such that wastes are collected and stored for subsequent transfer to a treatment, recycle, and/or disposal site.

The implementation of a central waste storage/transfer station for the STS program is advantageous. Such a facility would allow for consolidation into larger, more economical loads, and reduce waste collection time by providing generators with a place to deliver wastes. The operation establishes storage, recontainerization, and solid waste volume reduction facilities at many locations. A centralized storage/transfer station may serve as a transfer point for consolidating paperwork associated with hazardous waste management.

A central location for the facility should be determined by base planners. The size and type of facility is dictated by the quantities and nature of the wastes. This facility should be capable of handling waste materials arriving in all forms from the immediate collection area. Presently, VAFB stores hazardous waste at a concrete pad (SLC-1 East) at North Vandenberg (NVAFB). This area could develop into a hazardous waste storage/transfer facility.

c. Solid Waste Volume Reduction

Solid hazardous wastes are usually placed in 55-gallon drums and buried at Class I landfills. Under the interim final RCRA regulations, however, landfilling of empty containers is prohibited unless they have previously been crushed flat, shredded, or somehow reduced in volume before incorporation into a landfill. In some cases, the landfill may provide the required volume reduction services mandated.

In addition to compliance with RCRA regulations, volume reduction results in lower transportation costs for hauling, reduced landfill volume requirements (thus prolonging landfill life), and possibly reduced need for cover soil. On-base construction of a solid waste volume reduction facility is also considered as an alternative. Investigations into the alternatives available for solid waste volume reduction revealed that, for the quantities and frequencies of waste generated by STS-VAFB ground operations, compactors would be adequate if they were stationed at either the storage/transfer station or the on-site Class I landfill.

5. TRANSPORT FOR OFF-SITE DISPOSAL

Off-site transportation aspects of STS-VAFB hazardous waste management include surveys of waste haulers servicing the VAFB-Port Hueneme area, types and sizes of equipment used by these haulers, types of wastes to be handled, and unit transportation fees for the disposal sites. A summary of the transportation rates is given in Table 4.

TABLE 4 TRANSPORTATION COSTS (1980 DOLLARS)

Type of Truck	Capacity	Casmalia		Kettleman		West Covina	
		$/Trip	$/Gal	$/Trip	$/Gal	$/Trip	$/Gal
Flatbed Truck	18 drums	192	0.19	350	0.25	630	0.46
	25 drums	140	0.10				
	75 drums	240	0.06				
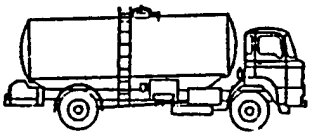 5,000-gal Vacuum Truck		160	0.03	400	0.08	606	0.12

6. WASTE MANAGEMENT SCHEMES

Alternative waste management schemes were developed by comparative analysis of the treatment/reuse/disposal options. The most practicable alternatives were then combined with appropriate support functions, resulting in the schemes outlined in Table 5.

TABLE 5

COMPARISON OF WASTE MANAGEMENT SCHEMES

Scheme	On-Site Treatment	Land Disposal	On-Site Incineration
1	Yes	Casmalia	Yes
2	Yes	VAFB	No
3	Yes	VAFB	Yes
4	Yes	Casmalia	No
5	No	Casmalia	No
6	Deluge water only	Casmalia	No
7	Deluge water and SRB wash waters only	Casmalia	No

Waste management Schemes, 1, 2, 3, and 4, which involve on-site waste treatment as well as on- or off-site ultimate disposal, are depicted in Figures 4, 5, 6, and 7, respectively. Schemes 5, 6, and 7 are predominantly off-site landfilling scenarios with little or no on-site treatment.

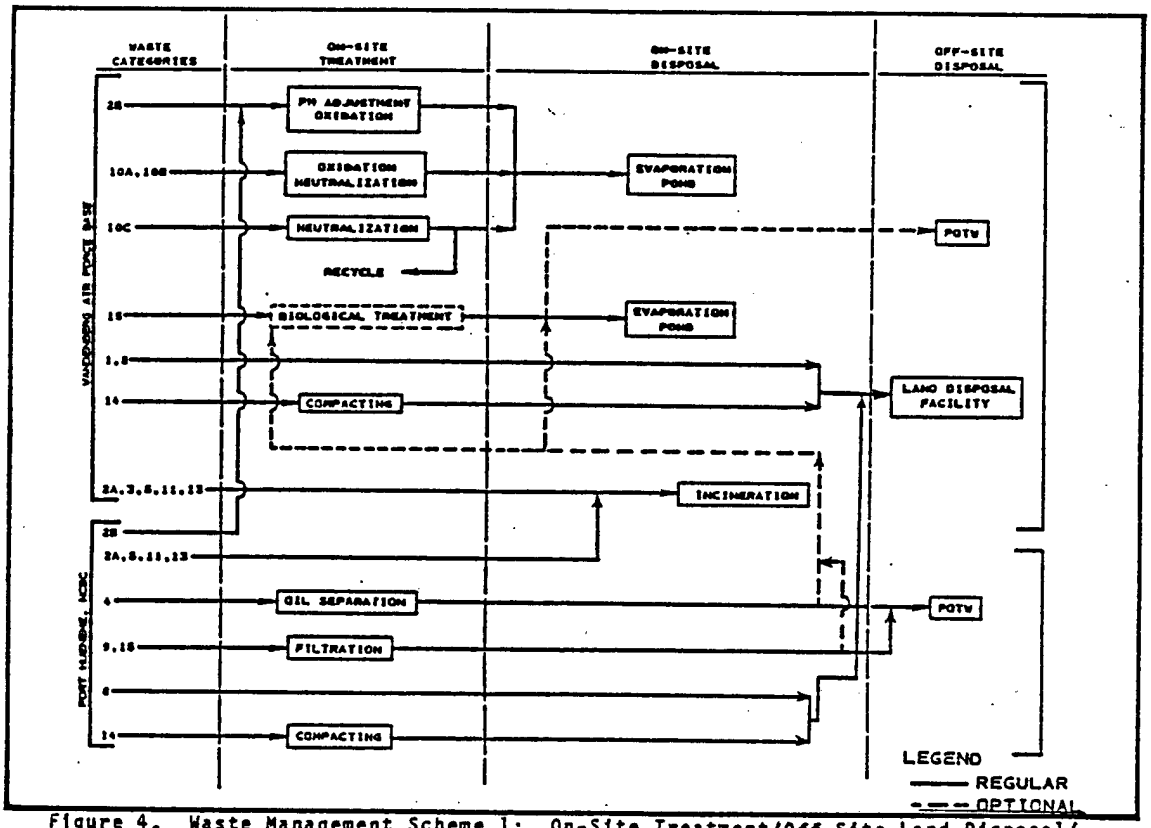

Figure 4. Waste Management Scheme 1: On-Site Treatment/Off-Site Land Disposal/ On-Site Incineration.

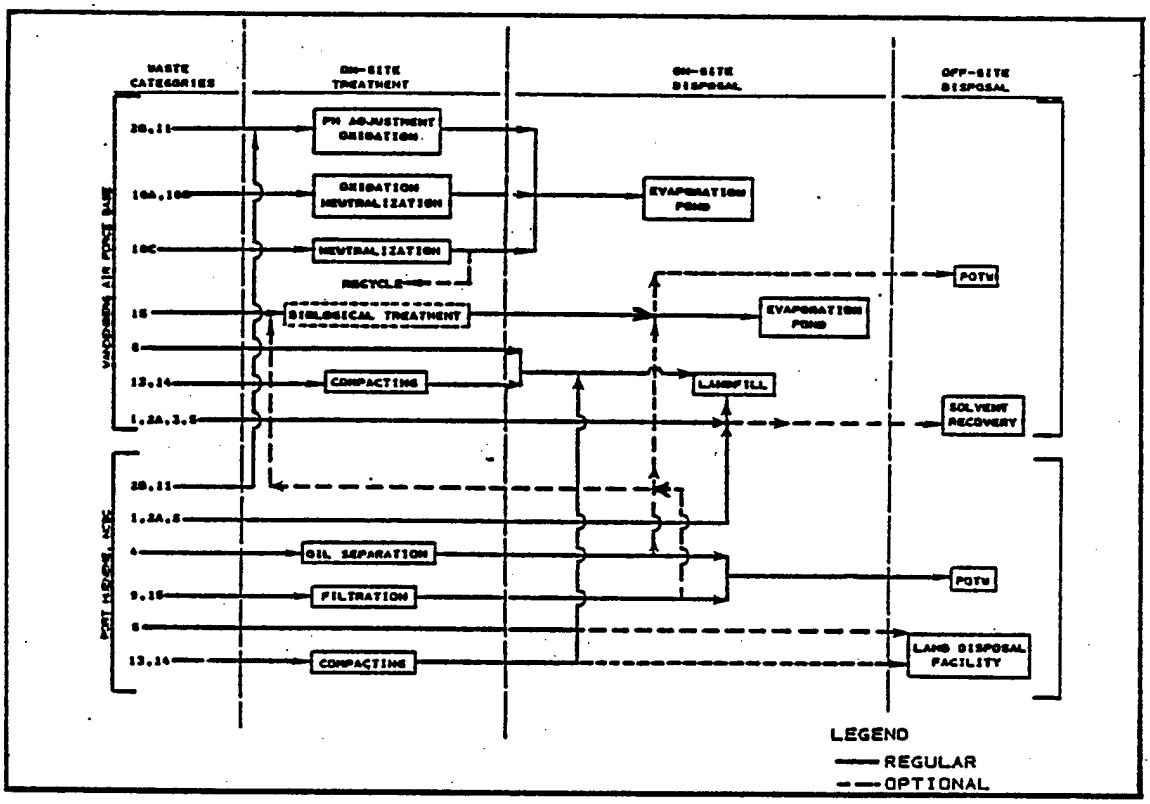

Figure 5. Waste Management Scheme 2: On-Site Treatment/On-Site Landfilling/ No Incineration.

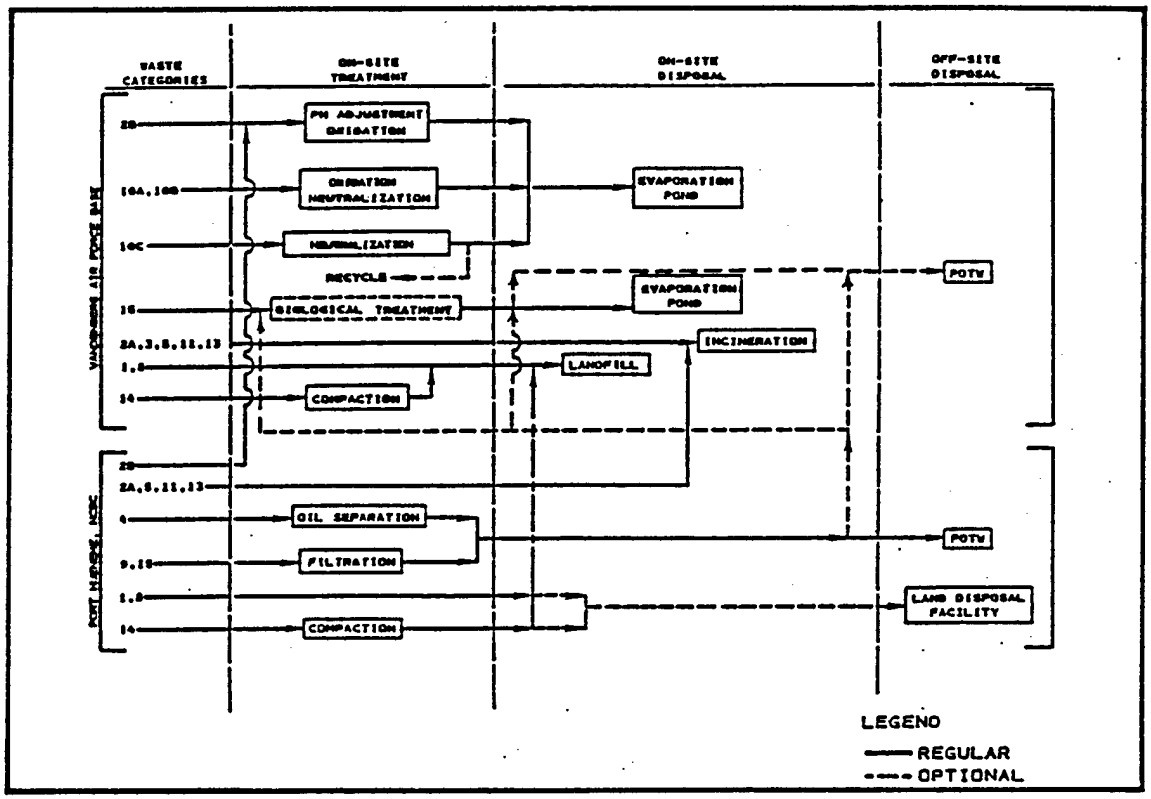

Figure 6. Waste Management Scheme 3: On-Site Treatment/On-Site Landfilling/ On-Site Incineration.

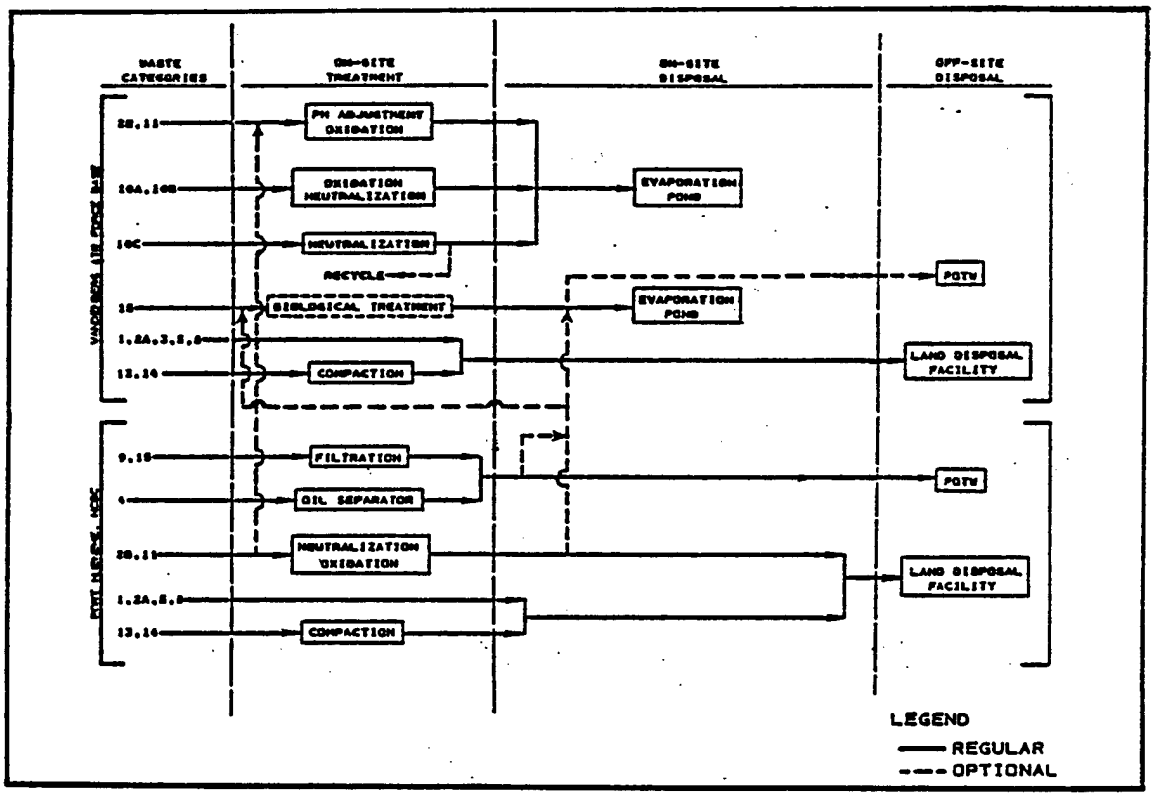

Figure 7. Waste Management Scheme 4: On-Site Treatment/Off-Site Land Disposal/ No Incineration.

Schemes 1 through 4 are based on proposed treatment and disposal operations to be performed at VAFB. These operations also dictate waste management options for Port Hueneme. Two on-site evaporation ponds are proposed: one at South Vandenberg (SVAFB), and the other at NVAFB. These will be used to dispose of the large volumes of effluents from physical-chemical treatment facilities and emergency eyewash and shower (EEW&S) wastewater from industrial sumps. The evaporation ponds will eliminate most of the need for separate biological treatment. Category 15 wastes will be routed to the evaporation pond; however, due to insufficient data on its characteristics and treatment requirements, biological treatment of this waste stream may be needed prior to its disposal to the pond. Waste Categories 2b, 10a, 10b, and 10c will undergo the appropriate physical-chemical treatments with subsequent disposal to an evaporation pond.

Final disposal of Category 4, 10c, and 15 wastes to coastal waters is not included as an option in this study. Once data on raw waste/effluent characteristics are available, ocean disposal should be investigated.

Waste Categories 2a, 3, 5, 11, and 13 will be subjected to thermal destruction in Schemes 1 and 3. In Schemes 2 and 4, these waste streams (except Category 11) will be disposed of by landfilling. Category 11 wastes will be treated by physical-chemical methods along with Category 2b wastes.

Category 1, 8, and 14 wastes are to be disposed of by landfilling. Category 13 (when not disposed of by incineration) and Category 14 will be compacted prior to land disposal in accordance with RCRA regulation. In schemes where incineration is not proposed (Schemes 2 and 4), wastes from Categories 2a, 3, and 5 will also be landfilled. Off-site recovery of solvents contained in waste Categories 1, 2a, 3, and 5 is also a possible option.

Small quantities of residues will be generated by most of the on-site treatment/disposal options. All four waste management schemes could easily accommodate these residues, since no additional facilities would be required.

For Schemes 1, 2, and 3, where VAFB has on-site disposal facilities available, transport of wastes from Port Hueneme to VAFB is considered more economical than separate off-base disposal.

Disposal of Port Hueneme's pretreated waste Categories 4, 9, and 15 to the Oxnard sewage system was considered a viable option, contingent upon Ventura Regional County Sanitation District (VRCSD) acceptance. If wastes cannot be disposed there, the most viable option is transport to VAFB's evaporation pond. An option for disposal at an off-site facility is also considered. POTW disposal of pretreated waste Category 15 at VAFB is considered, but is not recommended because routing to an evaporation pond is safer.

7. COMPARATIVE COST ESTIMATES FOR WASTE MANAGEMENT SCHEMES

For each system, estimates were developed for capital and/or operating costs. Capital costs are shown in 1980 and 1985 dollars. The economic scale-up factors used to develop the 1985 costs (1.58 for construction, and 1.67 for materials) are based on 1975 to 1980 increases. Operating cost scale-up from 1980 to 1985 is based on labor cost increases from 1975 to 1980, and yearly operating cost increases for 1985 to 1994 are based on the average yearly labor cost increases from 1970 to 1980. All cost indices were drawn from economic information presented in Engineering News-Record.

Off-site land disposal costs are determined in 1980 dollars. For 1985, a 15 percent escalation of costs is used. The projected costs for the years 1986 through 1994 are calculated assuming a 10 percent escalation of costs for each year after 1985. Transportation costs in 1980 dollars are based on the number of trips required for shipment of bulk liquids, drummed liquids, and drummed solids. Costs are escalated using the regression equation to predict values of the fuel price index, according to the periodical, Survey of Current Business, published by the U.S. Department of Commerce.

Overall costs do not include engineering and design costs or collection, transfer, and transportation equipment costs. No research and development costs are included, because all alternatives considered are proven technologies. Estimates assume the availability of existing unused buildings where system housing is needed, and availability of personnel protective equipment where required for hazardous waste handling.

Costs for solvent reclamation are not included since this option contains several variables. One cannot predict whether solvent reclamation would have a positive or negative effect on overall costs.

The costs for treating bilge waste are excluded since additional treatment facilities may not be required. Specifications for Station Set V32 state that the Port Hueneme Navy Base will furnish industrial waste treatment facilities.

Surcharge rates for discharging selected treated effluents from Port Hueneme to the local POTW are derived from equations which require data on parameters (peak and average flow rates, BOD, and suspended solids) which have not yet been quantified. Minimum costs for sewering these wastes, based on the average flow rate alone, are included in the cost estimates.

Compiled capital, O&M, and total project (capital plus O&M) costs for all seven scenarios are presented in Table 6.

TABLE 6

COST ESTIMATES FOR STS HAZARDOUS WASTE MANAGEMENT SCHEMES
(VAFB AND Port Hueneme)*

Scheme	Description	Capital Costs 1985 $	O&M Costs, $ 1985-1994	Total Project Cost, $
1	On-site treatment/off-site land disposal/on-site incineration	19,512,600	5,798,600	25,311,200
2	On-site treatment/on-site landfilling/no incineration	10,824,300	6,246,020	17,070,300
3	On-site treatment/on-site landfilling/on-site incineration	20,264,400	6,150,200	26,414,600
4	On-site treatment/off-site land disposal/no incineration	10,092,500	8,115,900	18,208,400
5	All wastes to off-site land disposal	1,268,000	15,851,100	17,119,100
6	All waste to off-site land disposal except 10c wastes from VAFB	8,820,400	9,069,600	17,890,000
7	All wastes to off-site land disposal except 10c waste from VAFB; 9 and 15 wastes from Port Hueneme to VAFB evaporation pond.	9,136,400	7,601,200	16,737,600

* Includes capital costs in 1985 dollars. All other costs escalated for the 1985 through 1994 period.

8. DISCUSSION OF WASTE MANAGEMENT SCHEMES

The seven schemes presented represent three basic waste management configurations:

- Treatment/incineration/on- and off-site landfilling (Schemes 1 and 3).
- Treatment/no incineration/on- and off-site landfilling (Schemes 2 and 4).
- No treatment/no incineration/off-site landfilling (Schemes 5, 6, and 7).

The total project costs for all schemes that do not employ incineration are about $16 million. Costs for incineration are approximately 60 percent higher, approaching $25 million, due to the capital cost associated with the incinerators.

Capital costs in Schemes 2, 4, 5, 6, and 7 are primarily attributable to the construction of evaporation ponds. There is essentially no variation in the total project costs regardless of whether the wastes are routed to evaporation ponds or exclusively to an off-base land disposal facility. Although Scheme 5 exhibits the lowest capital costs, total project costs for this scheme amount to $16 million, which is in the same range as all of the non-incineration scenarios. Since these costs are mainly a function of Class I landfill availability, they are less predictable than the costs associated with the other schemes. Total estimated project costs for transportation and disposal of all applicable STS wastes to the Kettleman Class I disposal facility will exceed Casmalia costs by 37, 55, 49, 49, and 38 percent for Schemes 1, 4, 5, 6, and 7, respectively. However, if VAFB wastes are disposed of at Kettlemen, and Port Hueneme wastes are transported to the West Covina facility, the estimated increases for

Schemes 4, 5, 6, and 7 will be 61, 41, 37, and 40 percent, respectively (Scheme 1 already uses this option). Closure of any Class I landfill would increase waste input to other landfills, as well as the rates charged for disposal.

Capital costs presented in Table 6 are expressed in 1985 dollars. Completion of the waste management facilities prior to 1985 would lower the stated capital costs. Construction costs at most VAFB station set facilities could be decreased by using equipment and personnel already on hand rather than bringing in contractors at a later date.

Figure 8 provides a list of the leading agencies involved in the permitting procedures for operations included in Schemes 1 through 7. Other agencies may either review and comment on the applications or provide advisory assistance to the leading agencies. Usually, the leading agencies distribute copies of the application to all interested parties.

Figure 8 also provides information on permitting procedures for ocean discharge, although this operation is not included in the above waste management schemes. Off-site transport of wastes by commercial haulers is excluded, since it does not require any permits for STS-VAFB.

All permits shown in Figure 8 are operation permits, with the exception of the permits for incineration, i.e., the California State Coastal Commission permit and the Santa Barbara Air Pollution Control District interim permit to construct. The number of permits/approvals required for each waste management scheme is given in Table 7.

TABLE 7

NUMBER OF PERMITS/APPROVALS REQUIRED FOR EACH WASTE MANAGEMENT SCHEME

Waste Management Scheme		Permits/Approvals								
No.	Description	Treatment	Incineration	Evaporation Pond	Class I Landfill	Discharge to MWTW*	Storage/ Transfer Facility	Off-Site Transport by Military†	Total	Notes
1	On-site treatment/off-site land disposal/on-site incineration	2	3	4	0	1	1	2	13	Separate EA's required for each evaporation pond. Incinerator permitting difficult due to strict California air emission standards.
2	On-site treatment/on-site landfilling/no incineration	2	0	4	2	1	1	2	12	Separate EA's required for each evaporation pond and Class I landfill.
3	On-site treatment/on-site landfilling; on-site incineration	2	3	4	2	1	1	2	15	Separate EA's required for each evaporation pond and Class I landfill. Incinerator permitting difficult due to strict California air emission standards.
4	On-site treatment/off-site land disposal/no incineration	2	0	4	0	1	1	2	10	Separate EA's required for each evaporation pond.
5	All wastes to off-site land disposal	0	0	0	0	0	1	2	3	
6	All wastes to off-site land disposal except 10c wastes from VAFB	2	0	2	0	0	1	2	7	EA required for evaporation pond.
7	All wastes to off-site land disposal except 10c wastes from VAFB; 9 and 15 from PM to VAFB evaporation pond	2	0	4	0	0	1	2	9	Separate EA's required for each evaporation pond.

* Port Hueneme only.

† No permits needed for transport by commercial waste haulers.

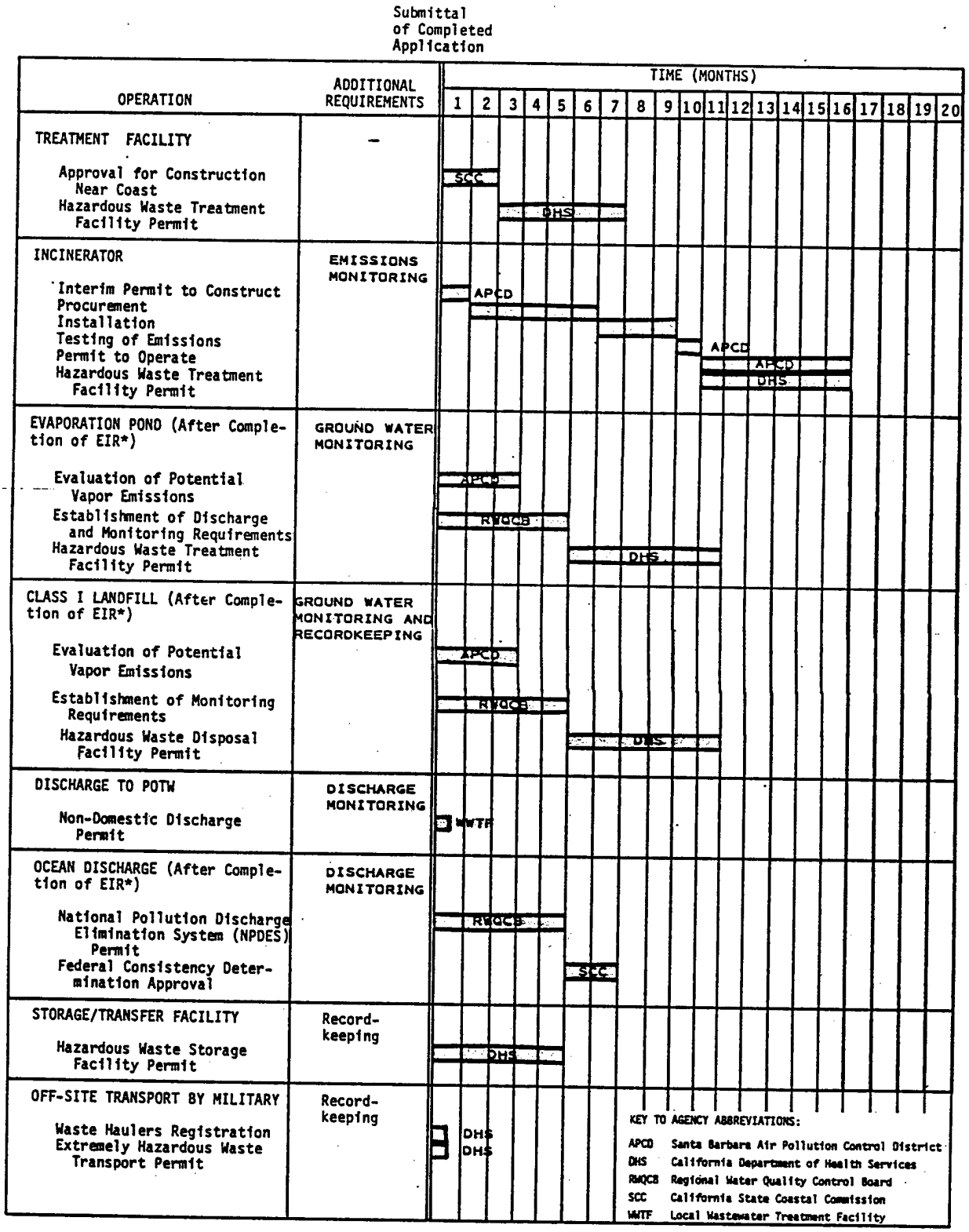

Figure 8. Environmental permit time requirements.†

† Based on the assumption that the State of California will have EPA interim status at the time STS-VAFB submits permit applications.

* Typical EIR completion time is 18 months; for federal land, local approval is not required.

Time spans shown in Figure 8 are estimates of the times needed for permitting under normal circumstances after submittals of completed applications. It should be noted that the scoping and approval of the Environmental Impact Reports (EIR's) is performed by the Regional Water Quality Control Board (RWQCB) and Department of Health Services (DHS); for federal land, local approval is not required.

9. CONCLUSIONS

The waste management program recommended for minimizing on-site construction at STS-VAFB would consist of off-site land disposal of all wastes, except Category 10c from VAFB and Categories 9 and 15 from Port Hueneme. These on-base facilities, depicted in Figure 9, would consist of:

- Storage/transfer station with an option for solid waste volume reduction.
- Evaporation pond at SVAFB for Category 10c waste, with neutralization prior to discharge.
- Filtration for Category 9 and 15 wastes at Port Hueneme prior to discharge to POTW.

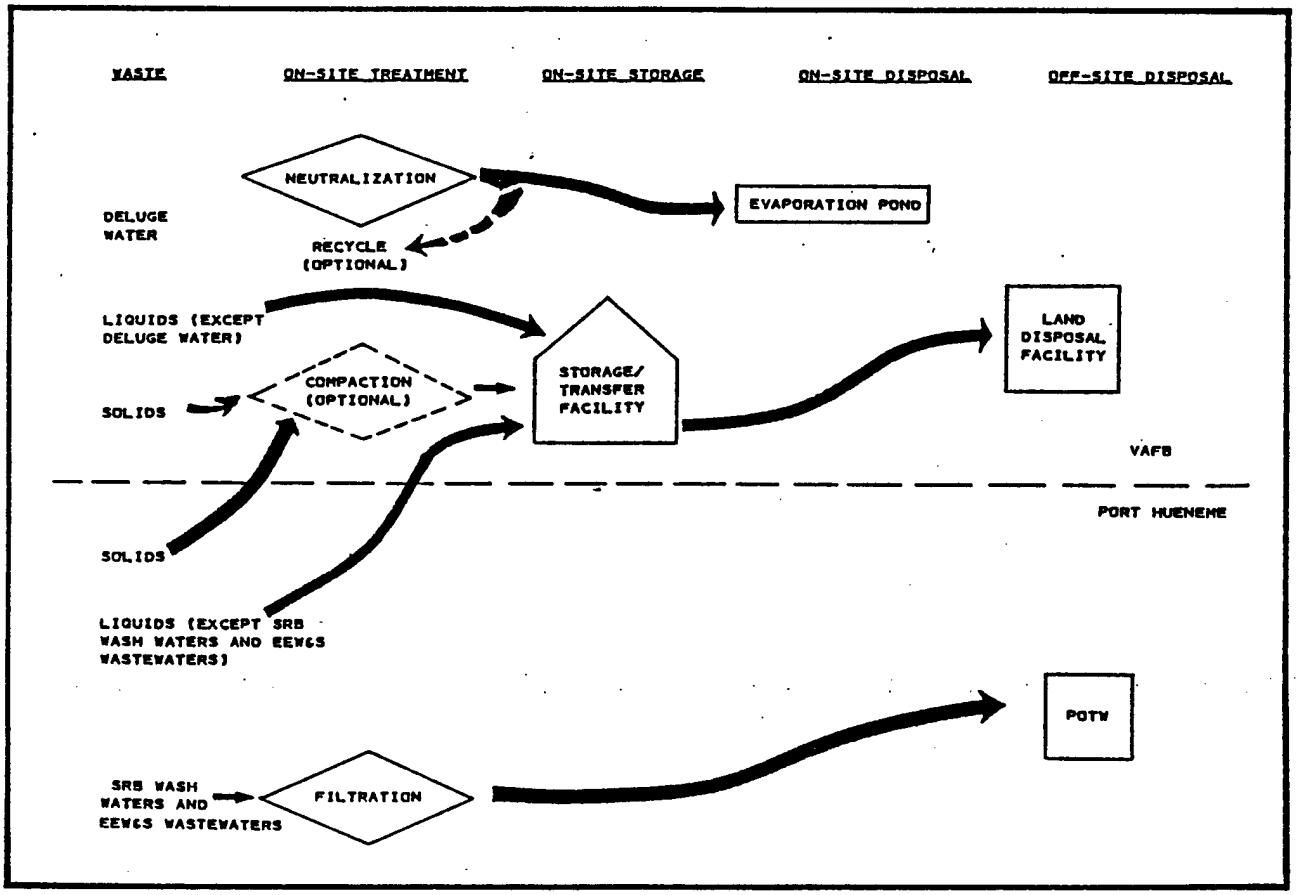

Figure 9. Waste management program recommended for minimizing on-site construction.

SECTION II

INTRODUCTION

1. BACKGROUND

Hazardous waste management requires a comprehensive systems approach to ensure that all components are adequately considered. The overall management system is illustrated graphically on Figure 10. The components are as follows:

- Waste Generation - Waste inventory details quantity of wastes, rate of generation, waste characteristics, degree of hazards, and source of generation.

- Collection/Storage/Transfer/Transport System - Provides a mechanism for the collection, storage, transfer, and transport of wastes to processing and disposal facilities. The system capacity and the adequacy of practices to meet public health and environmental concerns are the key criteria.

- Treatment/Recovery/Disposal System - Provides a mechanism for treatment and reuse of wastes, whenever possible and necessary, and their safe disposal. Again, the key criteria are system capacity, and its adequacy to meet environmental concerns.

- Government Control - Necessary for each component of the system. The controls include legislation, regulation, and the attendant enforcement procedures. The control component is arguably the most important part of the system. The other parts cannot function effectively without systematic application of the controls.

- Monitoring - Required to ensure compliance by system participants with the appropriate collection, treatment, recovery, and disposal controls. Monitoring ensures a degree of protection for public health and the environment, and provides the necessary observation of the entire waste management system.

The above management system should provide an adequate approach to hazardous waste management.

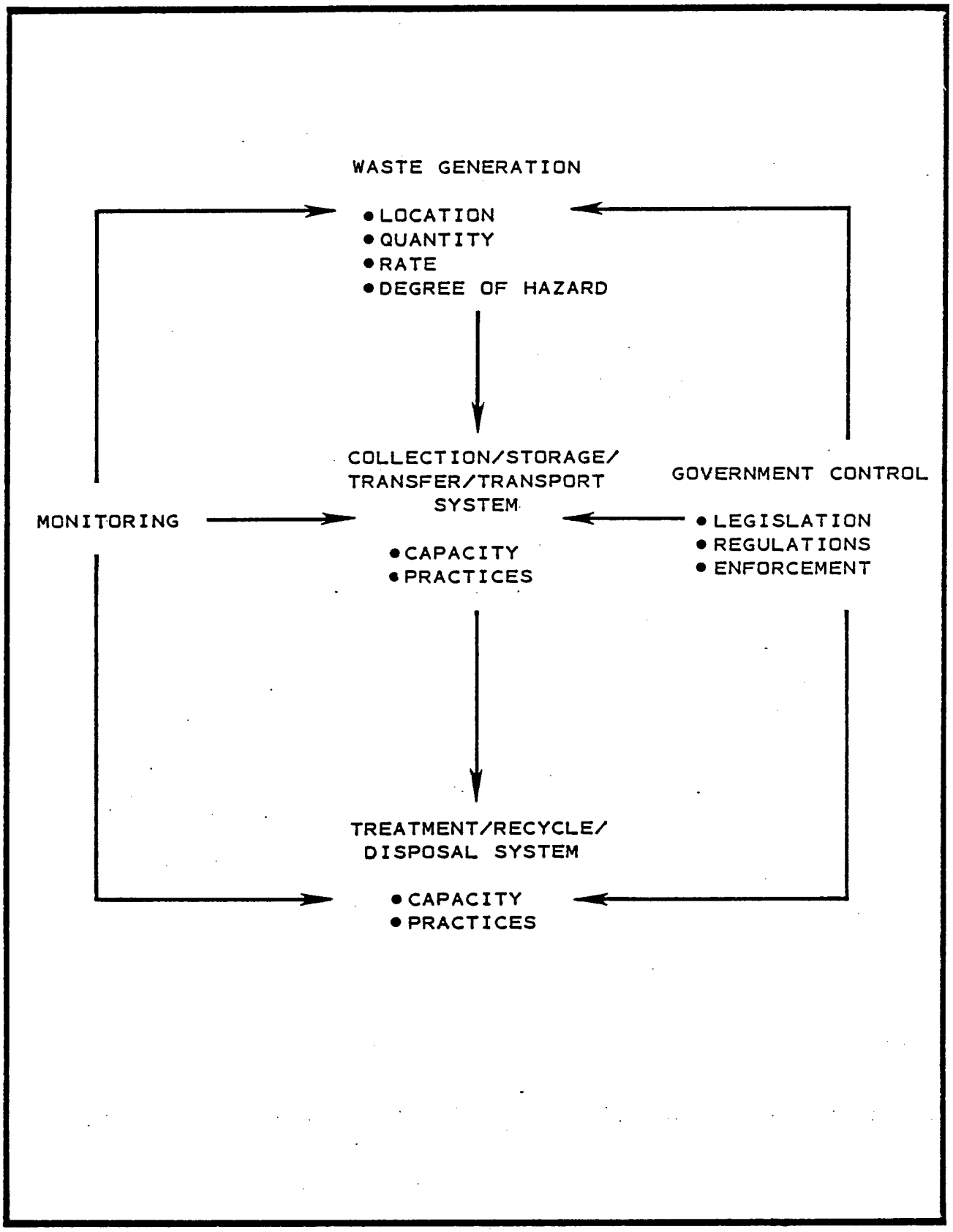

Figure 10. A model waste management system.

An inventory of potentially hazardous solid and liquid wastes likely to be generated at Vandenberg Air Force Base (VAFB) during the space transportation system (STS) ground operations was presented in Volume I of this report. As part of the supplement to the Final Environmental Impact Statement for the STS-VAFB, this inventory was compiled for both baseline and contingency conditions on a per launch basis, from which annual, monthly, and total project (i.e., years 1985 through 1994) waste generation quantities were be developed.

As a result of this detailed hazardous waste inventory, it was concluded that the STS-VAFB ground operations would generate a large variety of hazardous materials. Furthermore, a systematic characterization of these wastes revealed that they can generally be categorized as fuels, general solvents and paint wastes, industrial wastewater, and combustible and noncombustible solids.

2. PURPOSE AND REPORT ORGANIZATION

The primary purpose of the work presented in this report is to develop and assess alternative treatment/recovery/disposal options for the wastes generated by the STS-VAFB program. In light of the need to manage these wastes in a safe, legal, and environmentally sound manner, the objectives of the study presented in this report are as follows:

- Grouping of similar wastes into treatment categories.
- Feasibility and economic assessments of different treatment/recovery options, and identification of the applicable regulatory constraints.
- Feasibility and economic assessments of different disposal options, and overview of the related regulatory aspects.
- Analyses of the support functions for treatment/recovery/disposal alternatives.
- Formulation of different management schemes by combining the above elements and developing comparative cost estimates.

A more detailed discussion of the above items is given below.

a. Grouping of Wastes

It is necessary to classify wastes into groups which are identifiable by their similar and/or unique treatment/recovery/disposal pathways. From this classification, the different facilities and handling systems required by each group can be determined. All wastes within each group need to be compatible

with each other, and the group's compatibility with wastes in other groups must be assessable in order to organize handling procedures. A discussion of hazardous waste grouping into treatment categories is provided in Section III. Detailed information on the waste streams within each category is given in Volume III, Appendix A.

b. Treatment/Recovery

There are many technologies currently available for treating hazardous wastes for reuse, or for disposal to land or publicly owned treatment works (POTW's). Waste treatment or processing (including treatment for recovery) can eliminate or reduce the degree of hazard posed by the waste, render the waste more amenable for reuse/recycle/recovery, and/or result in waste reduction. Residues with low or no environmental hazard potential result from this treatment; these residues must be disposed of appropriately.

Section IV discusses the feasible treatment technologies available to treat space shuttle hazardous wastes for reuse or for disposal to land or public facilities. Some of these wastes are considered recyclable by the State of California, and the generator may be required to justify any intent to dispose without recycling, as specified in the California Administrative Code, Title 22 (see Volume III, Appendix B). Recyclable wastes are pointed out in the text and the type(s) of treatment necessary prior to recycling are discussed. Applicable treatment technologies are presented for all waste types which can or must be treated before disposal. Estimates of capital costs (in 1980 and 1985 dollars) and annual operating costs for each year of the project (1985 through 1994) are developed for each treatment method discussed in detail. In general, only proven treatment technologies are considered, although promising experimental or proposed alternatives may be mentioned.

c. Disposal

The majority of hazardous wastes are presently disposed of by landfilling and/or surface impoundments. Some hazardous waste disposal occurs at specialized incinerators; however, only small waste quantities are usually involved.

Section V of this report presents engineering and/or economic evaluations of STS-VAFB hazardous waste disposal alternatives and the associated regulatory constraints. The alternatives investigated include on-site (on-base) landfilling and surface impoundments, off-site landfilling, and on-site and off-site incineration. Since a major concern facing both government and industry is the siting of disposal facilities, special attention is given to the site investigation aspects of an on-site Class I landfill. Several alternative off-site Class I landfill sites

are also surveyed. Landfill capacity, a newly recognized problem, is given special consideration. Details on hazardous waste land disposal site regulations are given in Volume III, Appendix C.

d. Collection/Storage/Transfer/Transport

The use of inadequate storage facilities is a common problem in the United States and elsewhere. Spills or leaks of chemicals from defective or corroded containers can result in fires and explosions, release of potentially poisonous vapors, and difficult and costly cleanup and disposal problems. Attention is thus given in Section VI to this support function for hazardous waste management, with emphasis on segregation of chemically incompatible wastes, storage containers and their labeling, and recordkeeping.

The collection and transport of hazardous wastes account for a major cost of overall waste management in the United States. The increasing cost of fuel, the use of specialty waste transportation vehicles, and the decrease in the number of approved disposal sites are primarily responsible for high collection/transportation-related costs. The type of equipment and accessories required to collect and transport hazardous wastes depends largely on the characteristics of the wastes, the hauling distance, and the destination of the waste (e.g., transfer station, treatment facility, disposal site). These aspects of waste management are discussed and examined in terms of their associated costs in Sections V and VI. A full list of hazardous waste haulers registered in the State of California is provided in Volume III, Appendix D.

Hazardous waste transfer facilities sometimes provide a range of services beyond the receipt and consolidation of wastes for transport to disposal sites. It is not uncommon for hazardous waste transfer stations to provide storage facilities for subsequent treatment/recycle, as well as waste volume reduction facilities (e.g., compactors, shredders). A conceptual design of an on-site storage/transfer facility for STS-VAFB hazardous wastes, along with projected capital and O&M costs, is given in Section VI. Relevant regulatory requirements are given in Volume III, Appendices E through H.

e. Overall Waste Management Systems

Sections IV, V, and VI present information on waste handling operations and associated technologies/methods that are being or can be used for hazardous waste management. Each technology/method is defined in terms of its technical features and its applicability to a particular waste category (or categories). The above three sections also include projected estimated costs for owning and operating the investigated waste treatment and disposal facilities, including all of their supporting systems.

In Section VII, the selected technologies/methods are combined into several alternative waste management options. These alternative scenarios are discussed and evaluated with respect to pertinent engineering and economic factors.

Any on-site activities involving the storage, collection, transfer, treatment, or disposal of hazardous wastes will require a permit to operate. An Environmental Impact Statement/Report (EIS) will be required as part of the permitting process for any waste management scheme. A flow chart and description of the most important elements to be included in an EIS are presented in Volume III, Appendix I.

Table 8 lists the civil and criminal penalties for failure to comply with various federal statutes. All of the federal statutes listed in Table 8, as well as state and regional statutes indicated throughout this report, are discussed to facilitate planning and development in compliance with these regulations.

Possible future changes in local, state, and federal laws pertaining to hazardous waste disposal, and the resulting economic impacts of these laws, are impossible to accurately predict. The U.S. EPA is beginning to favor incineration over land disposal, and may thus relax air emission standards for hazardous waste incineration. This will reduce the costs of incineration options.

TABLE 8

CIVIL AND CRIMINAL PENALTIES FOR FAILURE TO COMPLY WITH APPLICABLE FEDERAL REGULATIONS

Statute	Criminal Penalty	Civil Penalty	Other
Rivers and Harbors Act of 1899			
Wrongful deposit of refuse or blockage of navigable water (33 USC, Sec. 411)	$500 - 2,500 file		
Discharge of oily substance from ship (33 USC, Sec. 1005)	$10,000 or 1 year, or both (willful violation of statute)	$10,000 per violation for willful or negligent violation; $5,000 per violation for other violations	
Clean Air Act			
Violations of the Clean Air Act generally (42 USC, Sec. 7401, et seq.)	For knowing violation of law: 1st offense $25,000 per day or 1 year, or both. Thereafter, $50,000 per day or 2 years, or both (Sec. 7413(c)) $10,000 or 6 months, or both (for knowing, false statements) (Sec. 7413(c))	$25,000 per day of violation; violation by owner or operator of stationary source (Sec. 7413(b)) The Economic Value of Delay of implementation of devices required by air pollution stadards (Sec. 7420)	Injunction (Sec. 7413(a)); Citizen Suit (Sec. 7603)
Specific Provisions			
Prevention of Significant Deterioration (PSD) (This provision prevents construction of new major polluting sources)			Injunction or other means to stop project (Sec. 7477)
Movable Sources			
(Removal of pollution devices, manufacture without pollution devices, etc.)		$10,000 or $2,500, depending on section violated (Sec. 7524)	
Federal Water Pollution Control Act			
It is illegal to discharge waste into water except in compliance with this Act (33 USC, Sec. 1251, et seq.)	1st violation, $2,500 per day of violation or 1 year, or both. Thereafter, $50,000 per day of violation, or 2 years, or both (willful or negligent violation) $10,000 or 6 months, or both (knowing, false statements)	$10,000 per day of violation (Sec. 1319(d))	Injunction (Sec. 1319(b)) Citizen Suit (Sec. 1365)

TABLE 8 (continued)

Statute	Criminal Penalty	Civil Penalty	Other
Occupational Safety and Health Act Noncompliance with statutes or regulations promoting occupational safety and health (29 USC, Sec. 651, et seq.)	1st offense, $10,000 or 6 months, or both. Thereafter, $20,000 or 1 year, or both (willful violation resulting in death) (Sec. 666(e)) $10,000 or 6 months, or both (knowing, false statements) (Sec. 666(a))	$10,000 per violation (willful or repeated violation) (Sec. 666(a)) $1,000 per violation (other violations and violations of reporting requirements) (Sec. 666(b),(c), &(d)) $1,000 per day (failure to correct violation) (Sec. 666(d))	Injunctions (Sec. 662)
Hazardous Substances Act The receipt or introduction of misbranded or banned hazardous material into commerce is prohibited (15 USC, Sec. 1261, et seq.)	1st offense, $500 or 90 days, or both. With intent to defraud, mislead, or for second offense, $3,000 or 1 year, or both (has a good faith exemption) (Sec. 1264)		Injunction - Criminal contempt for violation thereof (Sec. 1267)
Toxic Substances Control Act The use of chemicals with knowledge that it is not registered, failure to maintain records, and failure to comply with rules are prohibited (15 USC, Sec. 2601, et seq.)	$25,000 per day of violation, or 1 year, or both (Sec. 2615(b))	$25,000 per day of violation (Sec. 2615(a))	Injunction - Specific performance seizure (Sec. 2616); Citizen petitions to administrator (Sec. 2620)
Resource Conservation and Recovery Act (Solid Waste Disposal) Any violation of provisions of the Act concerning treatment, storage, and disposal of hazardous wastes (42 USC, Sec. 6901(e), et seq.)	1st offense, $25,000 per day or 1 year, or both. Thereafter, $50,000 per day, or 2 years, or both. Knowing transportation or disposal of wastes, or false statements (Sec. 6928(d))	$25,000 per day of failure to comply with compliance order (Sec. 6928(a))	Injunction (Sec. 6928(a)); Citizen suits (Sec. 6927); Public Petition for Regulations (Sec. 6974)
Hazardous Material Transportation Act Requires certain procedures for handling and transportation of hazardous materials (49 USC, Sec. 1801, et seq.)	$25,000 or 5 years, or both, for each offense of willful violation of the Act (Sec. 1804(b))	$10,000 per offense, or, if continuing one, per day (Sec. 1809(a))	Injunction - Punitive damages (Sec. 1810)

SECTION III

HAZARDOUS WASTE CHARACTERIZATION AND TREATMENT/REUSE/ DISPOSAL OPTIONS

1. INTRODUCTION

An essential early step in any discussion of treatment, reuse, and/or disposal of wastes from the space shuttle ground operations is the grouping of similar wastes into treatment categories. Many of the STS wastes are compatible in terms of chemical and physical properties so that they can be readily mixed and treated or disposed of together. These wastes then constitute a treatment category. In developing the treatment categories for the STS-VAFB, those categories already defined for Kennedy Space Center (KSC) were used to the extent possible to facilitate comparisons between the two areas. The twelve treatment categories are:

- Category 1: Recoverable Freon Wastes.
- Category 2: Hypergolic Fuels and Hypergolic Fuel-Contaminated Water and Alcohol.
- Category 3: Group I Hydrocarbon Wastes.
- Category 4: Bilge Water and Water Contaminated with Oil.
- Category 5: Group II Hydrocarbon Wastes.
- Category 8: Acids, Bases, and Aqueous Solutions Contaminated with Metal Ions.
- Category 9: Solid Rocket Booster Rinse Water Wastes.
- Category 10: Acidic and Basic Wastes Which Contain No Significant Metal Ions (Plus Oxidizer Wastes).
- Category 11: Fuel Vapor Scrubber Wastes.
- Category 13: Combustible Solids.
- Category 14: Noncombustible Solids.
- Category 15: Miscellaneous Wastewaters.

Categories 6, 7, and 12 are specific for KSC operations; there are no counterpoint wastes from STS-VAFB.

The treatment categories are described in more detail below. Table 9 gives the total annual quantities of wastes generated in each treatment category for each year of the space shuttle program at VAFB. This table was generated from a list of the STS-VAFB wastes by treatment category, showing the baseline per launch and contingency quantities, and from a list of wastes generated per station set, showing the treatment category assigned to each waste (Tables A-1, A-2, and A-3 in Appendix A).

2. TREATMENT CATEGORIES

In general, the descriptions of the STS-VAFB treatment categories parallel those at KSC. However, there are some significant differences. It is thus necessary to provide specific descriptions for the STS-VAFB which are consistent with the nomenclature and identifications developed elsewhere in this study.

Category 1 includes freon from flushing operations and SCAPE suit cleaning/decontamination. All SO-Freon wastes are in Category 1. However, freon metal-cleaning solvents or solvent mixtures containing freon are not included.

Category 2 includes hypergolic fuels (hydrazine, monomethyl hydrazine, aerozine 50, and UDMH) either as waste fuel or in water or alcohol from tank draining and purging and spill cleanup. All catalytic bed washwater (CB), fuel spill cleanup (FS), hydrazine (HY), and monomethyl hydrazine wastes are included in this category. For the purposes of treatment and disposal, this category is divided into two subcategories: waste fuels, and wastewaters containing fuels.

Category 3 includes petroleum-based lubricants, greases, motor oils, gasoline, hydraulic fluids, and Group I hydrocarbon solvents (i.e., unsubstituted solvents, such as heptane). All fuel, oil, and grease spills (except bilge wastes) (FO), hydraulic fluids (HF), and nonaqueous preservative wastes (PR) are included.

Category 4 is ocean vessel condensate contaminated with oil. Bilge wastes are produced only at Station Set V-32.

Category 5 includes a variety of organic wastes, such as halogenated hydrocarbon solvents (i.e., Group II hydrocarbon solvents), cleaning solvents, paints and paint wastes, paint strippers, foam monomers, adhesive wastes, etc. Most AW, IN, PA, and SO wastes fall into this category.

Category 8 for STS-VAFB includes only wastewater containing alodine from Station Set V-31, and KOH battery fluids from Station Set V-32. No other wastewaters containing significant levels of toxic metals were identified for STS-VAFB.

TABLE 9

STS-VAFB ANNUAL HAZARDOUS WASTE GENERATION BY TREATMENT CATEGORY*

Treatment Category	Location†	1985	1986	1987	1988-1994 (per year)
1	VAFB	1,600 gal (6,057 l)	2,400 gal (9,085 l)	4,000 gal (15,142 l)	6,000 gal (22,712 l)
2a	NVAFB	533 gal (2,017 l)	799 gal (3,024 l)	1,332 gal (5,042 l)	1,999 gal (7,566 l)
	SVAFB	5,209 gal (19,716 l)	7,814 gal (29,576 l)	13,023 gal (49,292 l)	19,534 gal (73,936 l)
	PH	43 gal (163 l)	65 gal (246 l)	108 gal (409 l)	162 gal (613 l)
2b	NVAFB	720 gal (2,725 l)	1,080 gal (4,088 l)	1,800 gal (6,813 l)	2,700 gal (10,220 l)
	SVAFB	3,200 gal (12,112 l)	4,800 gal (18,168 l)	8,000 gal (30,280 l)	12,000 gal (45,420 l)
	PH	120 gal (454 l)	180 gal (681 l)	300 gal (1,136 l)	450 gal (1,703 l)
3	NVAFB	15 gal (57 l)	22 gal (83 l)	37 gal (140 l)	56 gal (212 l)
	SVAFB	560 gal (2,120 l)	839 gal (3,176 l)	1,399 gal (5,295 l)	2,098 gal (7,941 l)
4	PH	TBD#	TBD	TBD	TBD
5	NVAFB	13 gal (49 l)	19 gal (72 l)	32 gal (121 l)	48 gal (182 l)
	SVAFB	4,569 gal (17,294 l)	6,853 gal (25,939 l)	11,422 gal (43,232 l)	17,133 gal (64,848 l)
	PH	8 gal (30 l)	12 gal (45 l)	20 gal (76 l)	30 gal (114 l)
8	SVAFB	160 gal (606 l)	240 gal (908 l)	400 gal (1,514 l)	600 gal (2,271 l)
	PH	9 gal (34 l)	14 gal (53 l)	23 gal (87 l)	34 gal (129 l)
9	PH	273,360 gal (1,034,668 l)	410,040 gal (1,552,001 l)	683,400 gal (2,586,669 l)	1,025,100 gal (3,880,004 l)
10a	NVAFB	1,955 gal (7,400 l)	2,933 gal (11,101 l)	4,888 gal (18,501 l)	7,333 gal (27,755 l)
	SVAFB	3,074 gal (11,635 l)	4,611 gal (17,453 l)	7,684 gal (29,084 l)	11,527 gal (43,630 l)
10b	NVAFB	440 gal (1,665 l)	660 gal (2,498 l)	1,100 gal (4,164 l)	1,650 gal (6,245 l)
	SVAFB	920 gal (3,482 l)	1,380 gal (5,223 l)	2,300 gal (8,706 l)	3,450 gal (13,058 l)

TABLE 9 (continued)

Treatment Category	Location†	1985	1986	1987	1988-1994 (per year)
10c	NVAFB	40 gal (151 l)	60 gal (227 l)	100 gal (378 l)	1,500 gal (5,678 l)
	SVAFB	600,000 gal (2,271,000 l)	900,000 gal (3,406,500 l)	1,500,000 gal (5,677,500 l)	2,250,000 gal (8,516,250 l)
11	NVAFB	3,200 gal (12,112 l)	4,800 gal (18,168 l)	8,000 gal (30,280 l)	12,000 gal (45,420)
	SVAFB	840 gal (3,179 l)	1,260 gal (4,769 l)	2,100 gal (7,948 l)	3,150 gal (11,923 l)
	PH	200 gal (757 l)	300 gal (1,136 l)	500 gal (1,892 l)	750 gal (2,839 l)
13	NVAFB	317 lb (144 kg)	475 lb (216 kg)	792 lb (360 kg)	1,188 lb (540 kg)
	SVAFB	24,317 lb (11,053 kg)	36,476 lb (16,580 kg)	60,793 lb (27,633 kg)	91,190 lb (41,450 kg)
	PH	6,426 lb (2,921 kg)	9,640 lb (4,382 kg)	16,067 lb (7,303 kg)	24,099 lb (10,954 kg)
14	NVAFB	288 lb (131 kg)	433 lb (197 kg)	722 lb (328 kg)	1,082 lb (492 kg)
	SVAFB	4,697 lb (2,135 kg)	7,044 lb (3,202 kg)	11,741 lb (5,337 kg)	17,613 lb (8,006 kg)
	PH	574 lb (261 kg)	862 lb (392 kg)	1,437 lb (653 kg)	2,156 lb (980 kg)
15	NVAFB	9,056 gal (34,277 l)	13,584 gal (51,415 l)	22,640 gal (85,692 l)	33,960 gal (128,539 l)
	SVAFB	6,240 gal (23,618 l)	9,360 gal (35,428 l)	15,600 gal (59,046 l)	23,400 gal (88,569 l)
	PH	196,480 gal (743,677 l)	294,720 gal (1,115,515 l)	491,200 gal (1,859,192 l)	736,800 gal (2,788,788 l)

* Includes total for both baseline and contingency values. Baseline numbers were calculated on a per launch basis with 4, 6, 10, and 15 launches per year for 1985, 1986, 1987, and 1988-94, respectively. Contingency numbers were calculated as weighted average per year based on total project contingency values.

† NVAFB - North Vandenberg Air Force Base
SVAFB - South Vandenberg Air Force Base
PH - Port Hueneme

\# Quantities to be determined.

** Does not include contingency SRB propellant spills.

Category 9 includes all SRB wash and rinse waters generated at Station Set V-32. These wastewaters may contain surfactants, seawater, and traces of solid rocket propellant, although in low concentrations.

Category 10 includes general acid and base wastewaters, waste hypergolic oxidizer, and wastewaters containing oxidizer. All alkaline cleaning solutions (AL), ammonia wastewaters (NH), nitrogen tetroxide wastewaters (NO), oxidizer spill cleanup wastes (OS), and quench water wastes (QW) fall into this category. For the purposes of treatment and disposal, it is useful to divide this category into three subcategories: waste oxidizer, wastewaters containing oxidizer, and general acid/base wastewaters. Oxidizer and oxidizer wastewaters are included in this category, because they can form nitric acid in water.

Category 11 includes effluent from the hypergolic fuel-vapor scrubbers (all HS wastes). There are a total of six scrubbers, four of which have a maximum capacity of 400 gal per launch, and two with a maximum capacity of 200 gal per launch. The scrubber effluent is expected to contain 1 to 2 percent hydrazine; in addition, it may contain some hydrazine reaction products. This waste category is essentially the same as Category 2b.

Category 13 contains all combustible solid hazardous wastes generated by the STS-VAFB. These include solvent-contaminated rags from the orbiter cleaning, solid foam or polymer scraps, solid insulation wastes, used paint brushes, contaminated air filters, drop cloths, etc.

Category 14 contains all noncombustible solid hazardous wastes. These include empty containers, battery casings, and noncombustible polymers. A few normally combustible solids are included in this category, because they might contain materials that should not be incinerated (e.g., beryllium dust, asbestos).

Category 15 includes miscellaneous wastewaters not readily classifiable elsewhere. These wastewaters have a generally high COD (up to 1 percent organics on the average) and little, if any, metal contamination. They include emergency eyewash and shower wastes, general cleanup wastewaters, wastewaters contaminated with organic solvents (e.g., MEK), and insulation and paint-stripping wastewaters. These last wastes may contain traces of organometallics from the paints. All EEW&S wastewater (EW), insulation wastewater (IW), and solvent wastewater (SW) fall into this category.

3. TREATMENT/RECOVERY/DISPOSAL OPTIONS

Table 10 gives a general overview of the treatment and disposal options available for the STS-VAFB hazardous wastes. Only those methods considered technically feasible for space shuttle wastes were considered. There are a variety of treatment and disposal methods which are, at this writing, too new, exotic, or

TABLE 10

SUMMARY OF TREATMENT AND DISPOSAL OPTIONS, STS-VAFB HAZARDOUS WASTES

Treatment Category	Reuse Directly	Treat and Recycle	Treat and Discharge	Land Disposal	Incineration
1	NA; cleaning operations require noncontaminated solvent.	California Title 22 recyclable waste; can be reclaimed by distillation either on-site or by a commercial solvent reclaimer; method of choice at KSC.	NA; most freons are stable and chemically inert, and do not respond to chemical or biological treatment.	Must meet RCRA requirements for disposal of liquid waste.	NA; most freons are not combustible.
2 a)	Fuels emptied from fuel pods could possibly be reused if proper quality control were maintained during the operation.	Possibly Title 22 recyclable waste, but the purification procedure is very complex; manufacturer or reclaimer might try to recover, but not on-site.	Chemically oxidizable, but must be mixed with water to control the reaction. Also feasible to inject this waste and oxidizer into a controlled reaction chamber.	Possible, but some landfills may not accept it. In accordance with RCRA, reactive wastes must be rendered unreactive by treatment or mixing prior to disposal; must also meet RCRA requirements for disposal of liquid waste.	Method of choice at KSC; requires incinerator designed to handle liquid wastes.
b)	NA; there is no identified use for fuel-contaminated water.	NA; not cost-effective to recover fuel or water.	Amenable to hypochlorite oxidation. Hydrogen peroxide can also be used, but copper catalyst is required. Oxidation with ozone may yield nitrosamines. Carbon adsorption could also efficiently remove	Possible, but some landfills may not accept it. In accordance with RCRA, reactive wastes must be rendered unreactive by treatment or mixing prior to disposal; must also meet RCRA requirements for disposal of liquid waste.	NA; organic content too low

TABLE 10 (continued)

Treatment Category	Reuse Directly	Treat and Recycle	Treat and Discharge	Land Disposal	Incineration
			hydrazine. Also amenable to biological treatments with a long retention time (e.g., aeration basins, oxidation ponds, and lagoons). Treated effluents may be discharged to evaporation basins or POTW. Cu, Cl, and organics in effluent from biological and chemical treatment may present a problem in POTW discharge; may require further treatment by deionization or carbon adsorption.		
3	Could be reused directly as fuel for oil burners; method of choice at KSC.	Title 22 recyclable; amendable to reclamation, possibly on site, but more likely by a commercial reclaimer.	NA; not cost-effective to treat for POTW or evaporation pond discharge.	In accordance with RCRA, ignitable wastes must be rendered nonignitable by treatment or mixing prior to disposal; must also meet RCRA requirements for disposal of liquid waste.	Requires incinerator designed to handle liquid wastes.
4	NA; no identified use for bilge water.	Oil/water separation with oil recovery; oil may have to be further purified for reuse.	Oil/water separation; water fraction may have to be treated biologically prior to discharge to evaporation pond or POTW.	Possible; would have to meet RCRA requirements for disposal of liquid waste.	Possible, depending on oil content; would require an incinerator designed to handle liquid wastes.

TABLE 10 (continued)

Treatment Category	Reuse Directly	Treat and Recycle	Treat and Discharge	Land Disposal	Incineration
5	NA; no identified use for contaminated solvents.	Title 22 recyclable; each solvent could be recovered by fractional distillation either on-site or by a commercial solvent reclaimer.	NA; not cost-effective to treat for POTW or evaporation pond discharge.	In accordance with RCRA, ignitable wastes must be rendered nonignitable by treatment or mixing prior to disposal; must also meet RCRA requirements for disposal of liquid waste.	Requires an incinerator designed to handle liquid wastes.
8	NA; no identified use for these wastewaters.	NA; concentrations of recoverable material too low.	Neutralization followed by precipitation prior to discharge to POTW or evaporation pond.	In accordance with RCRA, reactive wastes must be rendered unreactive by treatment or mixing prior to disposal; must also meet RCRA requirements for disposal of liquid wastes.	NA; organic content too low.
9	Final rinse water can possibly be reused for initial rinsing.	The water may be reusable with proper treatment; depends on water quality needed.	Granular media filtration or biological treatment (e.g., aerated lagoon, oxidation ditch) prior to POTW discharge; no treatment may be required for discharge to evaporation pond.	Landspreading or leach fields may be possible, depending on effluent quality and hydrogeological conditions. Quantity of waste renders landfilling expensive.	NA; organic content too low.
10 a)	Possibly reusable if contamination level low enough.	NA; purification process too sophisticated to be of interest to reclaimers at the present time.	Not amenable to chemical treatment as a discrete waste stream; mixed with 10b, can be chemically oxidized.	Possible, but some landfills may require pretreatment with peroxide; must meet RCRA requirements for disposal of liquid waste.	Possible; would require special N_2O_4 burners.

TABLE 10 (continued)

Treatment Category	Reuse Directly	Treatment and Recycle	Treat and Discharge	Land Disposal	Incineration
10 b)	NA; no identified use for wastewater contaminated with oxidizer.	NA; concentrations of recoverable material too low.	Chemical treatment (with H_2O_2) followed by neutralization; treated wastewater could be discharged to evaporation pond or POTW.	Possible, but some landfills may require pretreatment with peroxide; must meet RCRA requirements for disposal of liquid waste.	NA; organic content too low.
10 c)	NA; pH too low.	Following neutralization and possible deionization, water may be reusable as quench water.	Neutralization followed by discharge to evaporation basin or possibly ocean.	Possible, but large volume poses high disposal costs; must meet RCRA requirements for disposal of liquid waste.	NA; organic content too low.
11	NA; no identified use for scrubber wastes.	NA; not cost-effective to recover hydrazines from this waste.	Chemical treatment, possibly followed by a carbon filter; discharge to evaporation basin or POTW.	In accordance with RCRA, reactive wastes must be rendered unreactive by treatment or mixing prior to disposal; depending on solids content, may also need to meet RCRA requirements for disposal of liquid waste.	Possible, requires incinerator designed to handle liquid wastes.
13	NA; no identified use for combustible solid waste.	NA; no identified recoverable components in this waste.	NA; this category consists of solid waste.	In accordance with RCRA, any empty containers must be crushed flat, shredded, or similarly reduced in volume before landfilling; also, any ignitable solids must be rendered nonignitable by treatment prior to disposal.	Highly combustible; no specially designed incinerator required.

TABLE 10 (continued)

Treatment Category	Reuse Directly	Treatment and Recycle	Treat and Discharge	Land Disposal	Incineration
14	NA; no identified use for noncombustible solid waste.	NA; no identified recoverable components in this waste.	NA; this category consists of solid waste.	The only feasible option; in accordance with RCRA, any empty containers must be crushed flat, shredded, or similarly reduced in volume before landfilling.	NA; this waste category consists of noncombustible waste.
15	NA; no identified use for these wastewaters.	NA; solvent content too low to justify recovery.	Chemical oxidation, biological treatment, or filtration followed by carbon treatment; discharge to evaporation pond or POTW.	In accordance with RCRA, ignitable and/or reactive wastes must be rendered nonignitable and unreactive by treatment or mixing prior to disposal; must also meet RCRA requirements for disposal of liquid waste.	NA; organic content too low.

complex to be of immediate application. Such methods as encapsulation, microwave decomposition, and electrophoresis may become viable treatment/disposal alternatives before 1994, but they are not sufficiently advanced at the present time to determine the extent of their applicability or to develop realistic conceptual designs and cost estimates. Other conventional methods, such as reverse osmosis, trickling filters, activated sludge, and wastewater distillation, were eliminated, because the nature of the wastes (chemical composition, quantities, generation characteristics, etc.) limits their applicability. All wastes can be treated, recycled, or disposed of with existing available technology.

SECTION IV

HAZARDOUS WASTE TREATMENT OPTIONS

1. INTRODUCTION

In this section of the report, each category of hazardous waste will be discussed in terms of existing and projected treatment requirements. In evaluating waste treatment alternatives, special attention was given to:

- Determining the ability of the treatment systems to provide a level of treatment which will comply with the current environmental laws and standards.
- Determining the adequacy of the treatment systems to meet the demands which will be placed upon them during the shuttle program.

Under California law (Title 22, Division 4, Chapter 30, Article 12, see Appendix B), some hazardous wastes are considered recyclable. If these wastes are not recycled, the State Health Department may request that the Air Force provide written justification for not having recycled the waste. Presently, there is no penalty for not recycling these wastes. In the discussion of treatment categories that follows, those wastes subject to this law will be noted, and possible treatment/reuse systems will be evaluated.

Capital and operating cost estimates were developed for each treatment technology/system considered cost-effective and directly applicable without extensive research. Capital costs are shown in 1980 and 1985 dollars. The economic scale-up factors used to develop the 1985 costs (1.58 for construction, and 1.67 for materials)* are based on the cost increase from 1975 to 1980. Operating cost scale-up from 1980 to 1985 is based on labor cost increases from 1975 to 1980; yearly operating cost increases for 1985 to 1994 are based on the average yearly labor cost increases from 1970 to 1980. All cost indices were drawn from economic information presented in Engineering News-Record.

* These same factors, where applicable, were used for developing cost estimates presented in other sections of this report.

2. GOVERNING REGULATIONS

In accordance with Section 60189, Title 22, California Administrative Code, an Operation Plan must be submitted to the Department of Health Services by any organization which has applied for an Operating Permit for a hazardous waste facility. Operators of either on-site or off-site facilities must apply for a permit and submit an Operation Plan. Hazardous waste facilities which require permitting include transfer stations, storage, treatment, and disposal facilities, and hazardous waste resource recovery facilities. On-site storage facilities which store hazardous wastes for less than 60 days are exempt from the permit requirement.

To a large extent, the Operation Plan will provide the information on which the findings and conditions of the permit will be based. Consequently, the plan should present information in sufficient detail to provide a clear understanding of the characteristics of the site; the physical facilities, equipment, operating procedures, and personnel available; and the provisions for responding appropriately to emergencies and other contingencies.

The Operation Plan must include:

- Facility identification - name, address, location; name and address of owner and persons responsible for preparing the plan; general statement of the type(s) of waste management activities to take place at the facility; facility map or layout.

- Waste characterization - types; physical and chemical characteristics; weight or volume.

- Major physical facilities - description of the major elements to provide for treatment, storage, disposal, and reclamation of wastes; description of design features, size, materials of construction.

- Facility equipment and devices - waste handling equipment, safety equipment, security, lighting, and water supply.

- General operating procedures - procedures for receiving and identifying hazardous wastes; deployment of personnel; supervision of handling and disposal of wastes; control of wastes at facility; and facility closure plans.

- Personnel - staff requirements, training, and supervision.

- Contingency plan.

3. CATEGORY 1: FREON WASTES

This category includes approximately 2,300 kg (5,340 lb) of freon from equipment and launchpad flushing, and SCAPE suit cleaning for 1985. The freon may be contaminated with dirt, hypergolic fuel or oxidizer, or organic solvent. Freon is also used in the fire suppression systems (i.e., electrical equipment, computer room, etc.); this usage results in gaseous products, and is thus excluded from this study. Most freons are stable and chemically inert, and do not respond to chemical/biological treatment or disposal by incineration. The only other disposal option is landfilling.

However, freon is a recyclable hazardous waste. At a projected 1985 cost of over $13 per gal ($3.50 per l), reclamation may become particularly attractive. Reclamation may be accomplished either on site by simple distillation or by commercial solvent reclaimers. Table 11 lists some of the major chemical reclamation companies in California, and depicts STS-VAFB waste chemicals presently acceptable for reclamation. The economics of recycling contaminated solvents vary widely depending on the demand for the reclaimed products. Namely, the Air Force would be required to pay for freon reclaimed for Air Force use. If, however, the reclaimer intends to sell the purified product, the Air Force might be paid for the waste freon, with the fee variable depending on the demand for the reclaimed solvent. Values of such recoverable wastes are given in Table 12.

Fractional distillation on site could produce a reusable freon. The capital cost, including installation, for a basic system to recover Group I wastes would be $27,500 (FY 1980); this system would consist of a 60 gal/hr still, compressor, safety controls, pump, piping, four 300-gal tanks, and two 600-gal tanks. The reclaimed freon would probably be a mixture of freon compounds, unless a sophisticated distillation/quality control system were employed, but even the mixed freons would probably be of sufficient quality for most flushing purposes. Freon contaminated with oxidizer could not be mixed and distilled with other freons without chemical pretreatment to neutralize the oxidizer. Sodium hydroxide can be used to convert the oxidizer to sodium nitrate and sodium nitrite.

4. CATEGORY 2: HYPERGOLIC FUEL WASTES AND HYPERGOLIC FUEL-CONTAMINATED WATER AND ALCOHOL

For the purposes of treatment and disposal evaluations, this category can be divided into two subcategories: (a) Fuel wastes from spills or from orbiter draining, and (b) wastewaters/alcohols contaminated with hypergolic fuels.

Although both are extremely hazardous under California guidelines, their treatment and disposal problems are different. Figure 11 presents a schematic of the treatment options available.

TABLE 11

SOLVENT RECLAIMING OPERATIONS IN CALIFORNIA

Solvent Reclaimer	Category 1	Category 2a		Category 3	Category 5					
	Freon 400 gal/L*	Hydrazine 120 gal/L*	MMH 30 gal/L*	Heptane 350 gal/L*	Perchloro-ethylene 350 gal/L*	Methylene Chloride 350 gal/L*	Cellusolve Acetate 30 gal/L*	Methy. Ethyl Ketone 30 gal/L*	TCE/Freon Mixture 50 gal/L*	Misc. Solvent Mixtures 200 gal/L*
Baron-Blakeslee, Gardena	●				●	●			○	
Bayday Chemical Company, Santa Clara	●			○	○	●	○	○	○	○
Davis Chemical Company, Los Angeles	○			○	●	●	○	●	●	○
Environmental Recovery, Long Beach	○		●		●	●			○	○
Gold Shield Solvents, Los Angeles					●				●	
Oil and Solvents Process Company, Azusa	●			○	●	●	○	●	○	○
Zero Waste Systems, Oakland	●	○	○	○	●	●	○	○	○	○

* L = launch.

● Reclaimer pays for waste.

○ Reclaimer takes waste for free or purifies it for reuse for a fee.

□ Reclaimer does not accept waste.

TABLE 12

VALUE OF RECOVERABLE WASTES

Waste Category	Waste Description	Reimbursement to Air Force for Sale of Waste Solvents ($ per gal received)*	Cost of Reclaiming Solvent for Air Force Reuse ($ per gal recovered)
I	Freon	0.50 to 1.25	5.00 to 6.00
V	Perchloroethylene	0.25 to 0.75	1.50 to 2.40
	Methylene Chloride	0.45 to 0.75	1.50 to 2.20
	Methyl Ethyl Ketone	0.10 to 0.25	1.50 to 2.20
	TCE/Freon Mixture	0.10 to 0.25	1.50 to 3.00

* Some commercial reclaimers reimburse in terms of recovered quantities rather than quantities received.

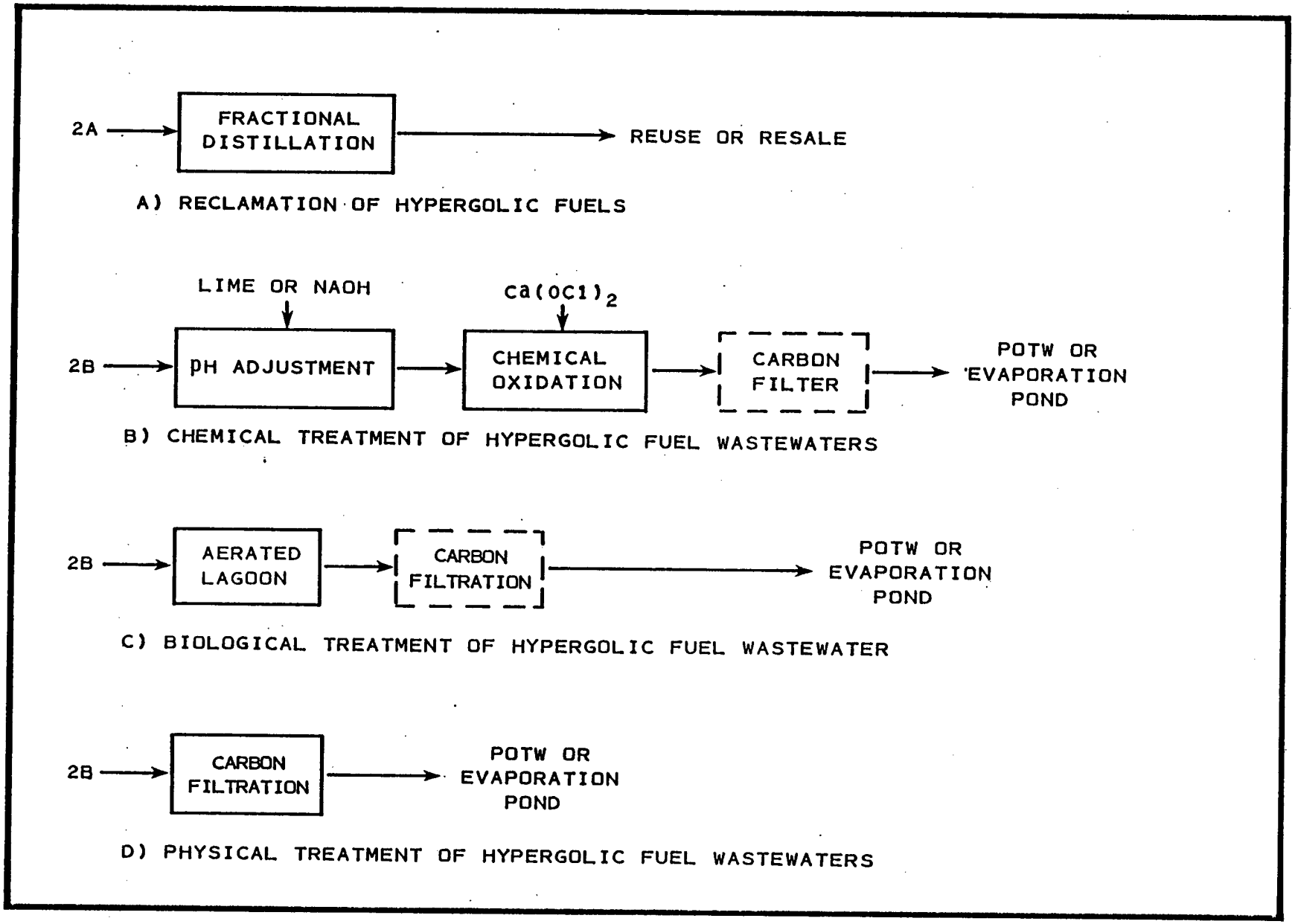

Figure 11. Category 2 treatment options.

Fuels drained from the orbiter after a normal flight or an abort can be considered to still be of fuel-grade quality. Ideally, these fuels could be drained into a holding tank and reused. This may not be practical for Air Force purposes, however. The fuel is of sufficient purity that it might be usable in certain industrial processes; the Air Force might consider using a waste exchange or reclaimer to salvage and sell this waste, or to return it to the manufacturer for reclamation. While not mentioned specifically as a recyclable hazardous waste, commercial chemical products including unused laboratory-grade products are included. The Air Force might have to justify any treatment or disposal of these fuels.

Fuel spills, on the other hand, are no longer pure chemicals. They may be contaminated with dirt, water, oil and grease, and vapor suppression agents, as well as oxidation products from exposure to air. Purification of contaminated hydrazines is not a simple process, requiring sophisticated equipment and process control. It is unlikely that either the Air Force or commercial reclaimers would be willing to dedicate the resources necessary to reclaim contaminated fuels. A supplier might be willing to accept it, but this would be solely the decision of the individual supplier, and is by no means certain. Treatment and disposal is a more likely alternative. Although disposal will be discussed more fully later in this report, some aspects of disposal are mentioned briefly below.

Hypergolic fuel wastes are incinerable. The Air Force reportedly has a system of 10 trailer-mounted incinerators capable of incinerating up to 22.7 l (6 gal) per minute of hydrazine and hydrazine mixtures. The combustion efficiency of these incinerators is unknown. Land disposal is another possibility, although some operating Class I landfills refuse to accept hypergols without some type of pretreatment or mixing to render them unreactive. Hydrazines can be chemically oxidized to nitrogen and chloride salts with hypochlorite, but with highly concentrated wastes, the reaction may be too vigorous to control. Fuel wastes could conceivably be fed slowly into a chemical reaction vessel used to treat wastewaters containing hypergolic fuels. Wet-air oxidation is a relatively new technology as applied to this type of waste, but it may represent a viable alternative. Theoretically, hydrazine could be oxidized to nitrogen and water. However, the applicability of wet-air oxidation to hydrazine treatment has not been demonstrated on a full scale; thus, the treatment technology is unproven. It might be feasible to inject waste hypergolic fuels and oxidizer into a controlled reaction chamber. This, in effect, "incinerates" both wastes, and provides a potential heat or power source.

Wastewaters containing hypergolic fuels are usually amenable to chemical treatment with hypochlorite. In general, the reaction proceeds as follows:

$$N_2H_4 + 2OCl^- \longrightarrow N_2\uparrow + 2H_2O + 2Cl^-$$

If substituted hydrazines are treated, the reaction products can include methanol, formaldehyde, and formic acid. An elevated pH is necessary to prevent the formation of chlorine gas, explosive NCl_3, or carcinogenic nitrosamines. Hydrazine in water is naturally basic, however, and alkaline additives may be unnecessary. Hydrogen peroxide is also a good oxidizing agent for dilute hydrazine solutions, although a copper catalyst (e.g., $CuSO_4 \cdot 6H_2O$) is required to cause the reaction to proceed at a reasonable rate.

These wastewaters may also be treated with ozone. At an elevated pH and particularly in the presence of UV light, ozone can significantly reduce the aqueous half-lives of hydrazine compounds. However, ozone, if used to treat unsymmetrical dimethyl hydrazine (UDMH), can yield nitrosamines. Tables 13 and 14 present cost estimates for chemical treatment of fuel-contaminated wastewaters.

Wastewaters containing hydrazines may be amenable to certain types of biological treatment. Any biological system with a long retention time (e.g., 10 to 25 days) and the ability to handle plug flows and discontinuous feeds could be feasible. This could include aeration basins, oxidation ponds, and lagoons. These requirements exclude such systems as conventional activated sludge units, trickling filters, bio-discs, etc. Tests with activated sludge units, for instance, have demonstrated that rigid controls are required to keep influent hydrazine concentrations below 1 mg/l, the "no effect" level. Continuous influent hydrazine concentrations above 10 mg/l seriously degrade removal capabilities of activated sludge. High influent concentrations will have a temporary deleterious effect on the feasible biological systems as well, but the extended retention times (over 10 days) allow sufficient time for system recovery. Testing would be necessary to ensure that biological treatment could produce a safe effluent, although the combination of air oxidation and biodegradation should be efficient. Table 15 presents cost estimates for biological treatment.

Disposal of these biologically or chemically treated wastewaters to a sanitary sewer system for further treatment by a conventional POTW is a possibility, but the presence of copper, chloride, and/or high concentrations of organics may present a problem. Chloride is a particular problem in the salt-sensitive Santa Ynez River basin. Before discharge to a wastewater treatment facility off of the base, further treatment such as deionization or carbon filtration may be necessary to ensure that this wastewater will not upset a conventional treatment plant (see Appendix J for source control parameters).

However, further testing would be needed to establish the efficiencies of these polishing steps on the high-strength wastewaters. Table 16 presents cost estimates for carbon filtration. Even if carbon filtration could efficiently remove hydrazine, the

TABLE 13

CATEGORY 2b. CHEMICAL OXIDATION
OPTION 1

System: Batch process
Use NaOH to keep the pH high
Use $Ca(OCl)_2$ as oxidant
NVAFB and SVAFB 2b wastes treated separately*
Volumes treated: 180 gal/launch at NVAFB
800 gal/launch at SVAFB

Capital Costs	1980		1985	
	NVAFB	SVAFB	NVAFB	SVAFB
Tanks and mixers	$4,000	$4,000	$6,680	$6,680
Pumps and piping	4,000	5,000	6,680	8,350
Chemical feed	5,000	6,000	8,350	10,020
Venting	3,000	3,000	5,010	5,010
Electrical and instrumentation	8,000	8,000	13,360	13,360
Sitework and miscellaneous	4,000	5,000	6,320	7,900
Total	28,000	34,000	46,400	51,320
System Total		$62,000		$97,720

Operating and Maintenance Per Launch

	1980	
	NVAFB	SVAFB
Power	$10	$20
Labor	60	80
Chemicals	70	320
Miscellaneous	150	200
Total	290	620
System Total		$910

Total Annual O&M Per Project Year

1985	1986	1987	1988	1989	1990	1991	1992	1993	1994
$5,640	9,170	16,380	26,340	28,120	29,760	31,400	33,170	34,940	36,580

* V32 produces only very small quantities of 2b wastes, and is not included in this estimate.

TABLE 14

CATEGORY 2b. CHEMICAL OXIDATION
OPTION 2

System: All 2b wastes treated together (including Port Hueneme's)
Batch process
NaOH and $Ca(OCl)_2$ treatment chemicals
Volume treated: 1,010 gal/launch

Capital Cost	1980	1985
Tanks and mixers	$9,000	$15,030
Pumps and piping	6,000	10,020
Chemical feed	7,000	11,690
Venting	4,000	6,680
Electrical and instrumentation	9,000	15,030
Sitework and miscellaneous	7,000	11,060
Total	$42,000	$69,510

Operating and Maintenance Per Launch

	1980
Power	$35
Labor	90
Chemicals	405
Miscellaneous	250
Total	$780

Total Annual O&M Per Project Year

1985	1986	1987	1988	1989	1990	1991	1992	1993	1994
$4,840	7,860	14,040	22,580	24,100	25,510	26,910	28,430	29,950	31,360

TABLE 15

CATEGORY 2b. AERATED LAGOON

System: All Category 2b wastes treated together
Assumes hydrazine biodegradable in 15-30 days
Volume treated: 1,010 gal/launch

Capital Cost	1980	1985
Aeration Basin	$4,000	6,320
Fencing	2,000	3,340
Piping & pumping	7,000	11,690
Aeration	3,000	5,010
Electrical & instrumentation	6,000	10,020
Miscellaneous & sitework	6,000	9,480
Total	$28,000	45,860

Operating and Maintenance Per Launch

	1980
Labor	$150
Power	130
Miscellaneous	200
Total	$480

Total Annual O&M Per Project Year

1985	1986	1987	1988	1989	1990	1991	1992	1993	1994
$2,980	4,840	8,640	13,900	14,830	15,700	16,560	17,500	18,430	19,300

TABLE 16

CATEGORY 2b. ACTIVATED CARBON

System: Single column carbon filtration
30 minutes empty bed contact
Assumes 1% waste strength treatable by 600 lb carbon
Volume treated: 180 gal/launch at NVAFB
800 gal/launch at SVAFB
Combined: 1,010 gal/launch

Capital Cost

	1980			1985		
	NVAFB	SVAFB	Combined	NVAFB	SVAFB	Combined
Carbon columns	$2,000	2,500	3,000	$3,340	4,175	5,010
Pumps & piping	3,000	4,000	5,000	5,010	6,680	8,350
Tankage	1,000	3,000	3,000	1,670	5,010	5,010
Electrical and instrumentation	4,000	5,000	6,000	6,680	8,350	10,020
Miscellaneous and sitework	2,000	3,000	3,000	3,160	4,740	4,740
Total	$12,000	17,500	20,000	$19,860	28,955	33,130
System Total		$29,000	$20,000		$48,815	$33,130

Operating and Maintenance Per Launch

	1980		
	NVAFB	SVAFB	Combined
Power	$1	1.5	1.5
Labor	15	20	20
Carbon	0.1	0.4	0.5
Miscellaneous	25	30	30
Total	42	52	52
System Total		$94	$52

Total Annual O&M Per Project Year

Separate Systems:

1985	1986	1987	1988	1989	1990	1991	1992	1993	1994
$580	950	1,690	2,720	2,900	3,070	3,240	3,430	3,610	3,780

Combined Systems:

$320	520	940	1,510	1,610	1,700	1,790	1,900	2,000	2,090

high concentrations in the space shuttle wastewaters would probably necessitate frequent recharging or replacement of the carbon (ranging from a few hours to a few days during peak operation periods), or construction of a treatment facility with extremely large capacity. The use of carbon as a polishing step is a much more reasonable application of the carbon filter.

An alternative to discharging the treated wastes to a sanitary sewer would be discharge to a lined evaporation basin. Conventional landspreading would probably not be permitted by the Regional Water Quality Control Board, due to the nature of the ground water under the base and the contaminants in the wastewater. However, lined evaporation basins, coupled with leachate collection systems, provide an effective means of disposing of the wastewater without advanced treatment or fear of ground water degradation. Cost estimates for an evaporatus pond capable of handling treated 2b, 10b, and 10c wastes are given in Table 17.

In fact, an evaporation basin was investigated as a treatment alternative, eliminating the chemical treatment. Hydrazine, monomethyl hydrazine (MMH), and UDMH are all oxidized in water with half-lives at pH 7 of 5 days, 7 days, and 10 days, respectively (Personal Communication, John Edwards to J. R. Marsh, November 1980). Half-lives are shortened at elevated pH, which is the natural characteristic of these wastewaters. The use of copper(II) as a catalyst can shorten half-lives significantly. The presence of any biological activity in the basin may serve to degrade the fuel or its oxidation products still further. With evaporation from open water bodies exceeding precipitation by almost two to one at VAFB, a large evaporation pond would be able to treat and dispose of the wastes generated during the projected launch schedule. There is a possible drawback in that the hydrazines and their degradation products are volatile, and could be emitted from a basin as a vapor.

A study was performed on the environmental chemistry of hydrazine by the Air Force Engineering and Services Center, Tyndall Air Force Base, Florida*. According to this study, hydrazine liquid must be diluted with almost 1,000 parts of water before the vapor concentration immediately above the fuel solution meets the Threshhold Limit Value (TLV) accepted by the Air Force (0.13 mg/m^3). If all wastes suggested for discharge to this evaporation pond are discharged in the quantities and con-

* Zirrolli, J. A., B. A. Braun, T. B. Stauffer, D. A. Stone, and M. G. MacNaughton. Environmental Chemistry of Hydrazine Fuels. Air Force Engineering and Services Center, Tyndall Air Force Base, Florida. Presented at the 1980 JANNAF Safety and Environmental Specialist Session, March 12, 1980, Monterey, California. CPIA Publication 313, April 1980.

TABLE 17

COST ESTIMATE FOR EVAPORATION POND FOR TREATED 2b, 10b, and 10c WASTES

1500' x 1500' Surface by 4' SWD Evaporation Pond

Costs	1980	1985
Clearing & Grubbing ($500/ac)	$4,000	$6,300
Earthwork (120,000 cy @ $2.75)	330,000	521,400
Lining (2,350,000 SF @ $1.80/SF)	4,230,000	6,683,400
Piping & Drainage	75,000	118,500
Fencing (6,400' @ $8)	51,000	80,600
Miscellaneous	90,000	142,200
	$4,780,000	$7,552,400

Annual O&M Costs	1980	1985
Labor (3.0 hr/day)	$10,950	$18,300
Miscellaneous	10,000	15,800
	$20,950	$34,100

Total O&M Costs by Project Year

1985	1986	1987	1988	1989	1990	1991	1992	1993	1994	Project Total
34,100	36,400	40,100	44,100	48,500	53,300	58,600	64,500	71,000	78,000	$527,600

centrations anticipated, the maximum hydrazine concentration in the pond will be approximately 200 mg/l, which is considerably less than the 1,000 mg/l concentration mentioned above.

5. CATEGORY 3: GROUP I HYDROCARBON WASTES

Category 3 includes petroleum-based lubricants, greases, motor oils, gasoline, fuels, and hydraulic fluids from equipment maintenance and spills, and Group I hydrocarbon solvents (i.e., unsubstituted solvents such as heptane). All of these wastes, totaling 575 gal (2,177 l) for 1985, are considered recyclable under California hazardous waste regulations. It is conceivable that some type of re-refining or fractional distillation/reformulation (Figure 12) could be done on the base, but the generally small quantities of wastes under discussion render such a choice uneconomical. Several of the solvent reclaiming operations listed in Table 12 also handle waste oils, lubricants, and hydraulic fluids. On the other hand, these wastes are all combustible, and can be used as fuels in conventional oil burners or incinerators with heat exchangers.

With the exception of re-refining, there are no treatment options for Category 3 wastes. They can either be disposed of by incineration or landfilling, or they can be reclaimed. VAFB currently has a contract with the Defense Property Disposal Office (DPDO) for collection of Group I hydrocarbon wastes. STS wastes in this category could be segregated for inclusion in DPDO collections.

6. CATEGORY 4: BILGE WASTES

Bilge waste is essentially ocean vessel condensate water contaminated with sea water and oil. All Category 4 wastes are generated by the SRB recovery boats at Station Set V32 at Port Hueneme. A crucial step in treating bilge waste is to separate the oil from the water. Under federal law (40 CFR 110), oil (including oily bilge wastes) cannot be discharged to the ocean. The oil is difficult to treat biologically, particularly if in high concentrations, and will foul many treatment processes. Consequently, as much oil as possible must be removed from the water.

The typical approach is simple gravity separation. Since the oil and water are not miscible, they will separate naturally if allowed to remain quiescent for a period of time. The oil will either float to the surface or settle to the bottom, depending on its chemical characteristics, and can be skimmed off or drained. If the oil has become partially emulsified and droplets of oil are suspended in water, it may be necessary to utilize air flotation to break up the emulsification and to bring all of the oil to the surface. Without a reasonable estimate of waste quantity, a single cost estimate cannot be generated, since a size cannot be specified.

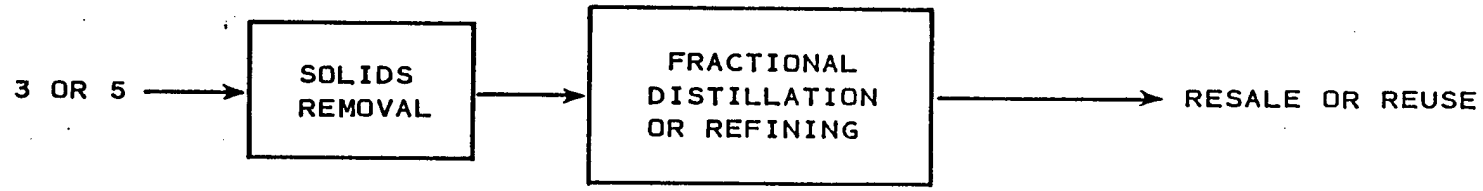

Figure 12. Categories 3 and 5 treatment options.

Once it has been separated from the water, the oil can be further treated for reuse, or it can be incinerated or otherwise disposed. The water will require further treatment. If the salt content is low, the water may be dischargeable directly to the local POTW. If this option is not available, it may be necessary to treat the water on site with some simple biological treatment, e.g., an oxidation ditch. It may be possible to discharge the water back to the ocean if the oil removal efficiency is high enough. Acceptability for ocean disposal is determined on a case-by-case basis through the State Coastal Commission and the Regional Water Quality Control Board. This type of discharge would require an NPDES permit specifying the limitations for the level of pollutants in the authorized discharge (40 CFR 125).

Additional facilities for the treatment of bilge wastes may not be required. The specifications for Station Set 32 state that the Port Hueneme Navy Base will furnish industrial waste treatment facilities. It is assumed that the base has major bilge waste treatment systems, and space shuttle program bilge wastes should not add appreciably to the quantities routinely handled by the Navy.

7. CATEGORY 5: GROUP II HYDROCARBON WASTES

Category 5 includes halogenated hydrocarbon solvents, cleaning solvents, paints and paint wastes, paint strippers, insulation monomers, etc., totaling 4,328 gal (16,384 l) in 1985. Approximately 94 percent (by volume) of this category is the solvent fraction, and is thus considered recyclable and is encouraged under State of California hazardous waste regulations. Fractional distillation, preceded by some type of solids removal, could be used to reclaim these solvents (Figure 12). Sophisticated process controls and quality control are required to make solvent recovery a viable alternative. In general, many industries with a large volume of solvent waste use a commercial solvent reclaimer (Table 12), rather than incur the expense of installing and operating the equipment needed to reclaim solvents. The capital cost, including installation, for a basic system (consisting of a 60-gal/hr still, compressor, safety controls, pump, piping, and two 600-gal holding tanks) to recover Group II hydrocarbons would be $16,500 (FY 1980). Comments made earlier regarding Categories 1 and 3 are applicable for Category 5 as well. If not reclaimed, Category 5 wastes can be incinerated without prior solids removal. Currently, the local DPDO unit will not accept these solvents for disposal or reclamation. However, a December 1980 DPDS message identifies many of the solvents that DPDO will begin to take by the end of FY 1981.

8. CATEGORY 8: ACIDS, BASES, AND AQUEOUS SOLUTIONS CONTAINING METAL IONS

Category 8 includes potassium hydroxide solutions emptied from batteries and wastewaters contaminated with alodine (chromic acid and ferricyanide). Treatment of these wastewaters involves

two operations: pH adjustment, and metal removal. Both operations can be conducted in a single unit as a two-stage batch process (Figure 13). Because of the small quantities of Category 8 wastewaters generated, it would be feasible to mix the Port Hueneme and VAFB wastes. This may eliminate the need for purchasing chemicals for initial pH adjustment, as VAFB Category 8 wastes are acidic while those from Port Hueneme are basic. Hypochlorite and metabisulfite would be needed to precipitate the chromium and to oxidize the cyanide fraction of these wastes. This procedure produces 4.5 to 9 kg (10 to 20 lb) of chemical sludge per launch which can be removed from the reaction tank, dried, and hauled to a Class I disposal site for landfilling. Table 18 presents the costs for the chemical treatment of Category 8 wastewaters.

The only alternative to chemical treatment is landfilling. Namely, it might be simpler to seal the wastes into a drum for land disposal, since only one 55-gal drum of Category 8 wastes is produced per launch.

9. CATEGORY 9: SRB RINSE WATERS

Category 9 includes solid rocket booster wash and rinse waters. In general, these wastewaters will contain surfactants and some seawater. There may possibly be traces of hydrazine and/or SRB propellant, but in small quantities. All of this wastewater is produced at Port Hueneme. In terms of quantity, Category 9 is the second largest volume waste generated by the space shuttle ground operations. The degree of treatment needed for this waste will depend in part on the surfactant used. If TURCO 5948 is used, a considerably higher degree of treatment will be necessary than if a nonhazardous surfactant is used. TURCO 5948 contains several hazardous chemicals, and would be deleterious to marine life if discharged to the ocean. Furthermore, the chemicals may be nonbiodegradable, eliminating biological treatment options. Consequently, a fairly sophisticated chemical and carbon filtration system would be needed to treat the wastes. In addition, supporting laboratory facilities would be needed to ensure that a proper degree of treatment is achieved. However, it is understood that the Air Force is seeking a nonhazardous, biodegradable substitute surfactant. The treatment evaluation for Category 9 assumes the use of some surfactant other than TURCO 5948.

The preferred treatment method will depend on the components of the wastewater (Figure 14). Wastewaters high in biodegradable organics and low in salt can be effectively treated in a simple, two-stage, aerated lagoon or oxidation pond (Figure 14). In a two-stage system, the first stage can be operated part-time as a settling zone, with the majority of biological activity occurring in the second stage. One potential drawback to biological treatment is the requirement for adequate nitrogen, phosphorus, and other nutrients to support biological growths. These nutrients may not be present in SRB wash and rinse waters. If so, another waste would have to be mixed with SRB rinsewaters to provide a

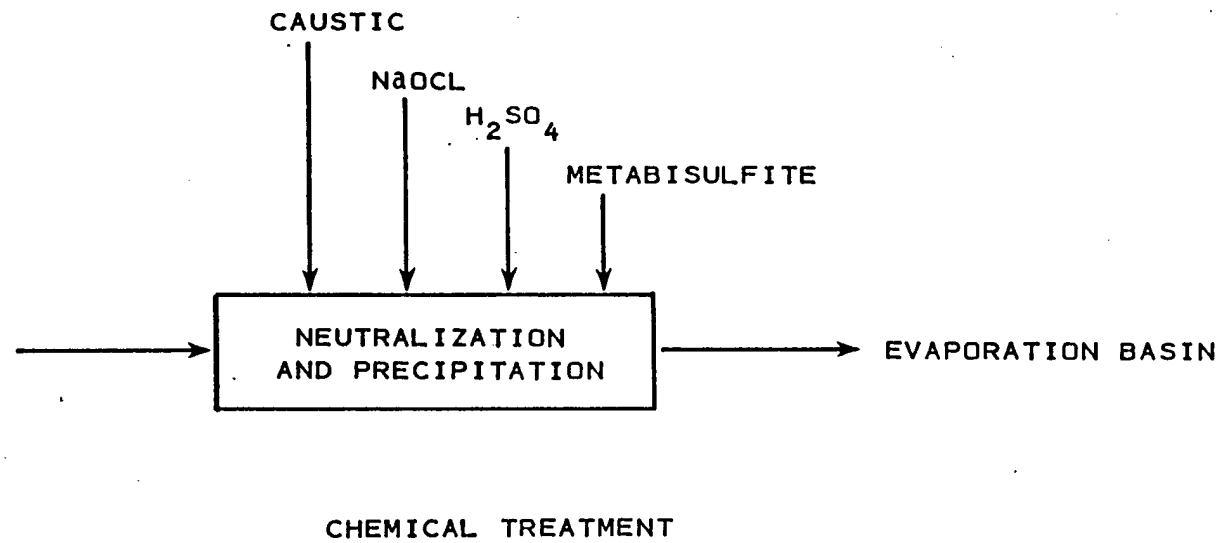

Figure 13. Category 8 treatment option.

TABLE 18

CATEGORY 8. CHEMICAL TREATMENT

System: 200 gal batch reaction tank with conical bottom for sludge removal
Chemicals needed - NaOCl, H_2SO_4, metabisulfite
Volume treated: 42 gal/launch

Capital Cost	1980	1985
Reactor	$900	$1,500
Pumps and Piping	800	1,340
Sludge holding tank	300	500
Chemical Feeders (X3)	750	1,250
Venting	800	1,340
Electrical & Instrumentation	2,500	4,175
Sitework & Miscellaneous	1,000	1,580
Total	$7,050	$11,685

Operating & Maintenance Per Launch	1980
Power 30 HP/hr/launch	$ 2
Labor 4 MH/launch	40
Chemicals	25
Misc	13
Total	$80/launch

Total Annual O&M Per Project Year

1985	1986	1987	1988	1989	1990	1991	1992	1993	1994
$500	810	1,440	2,320	2,470	2,620	2,760	2,920	3,070	3,220

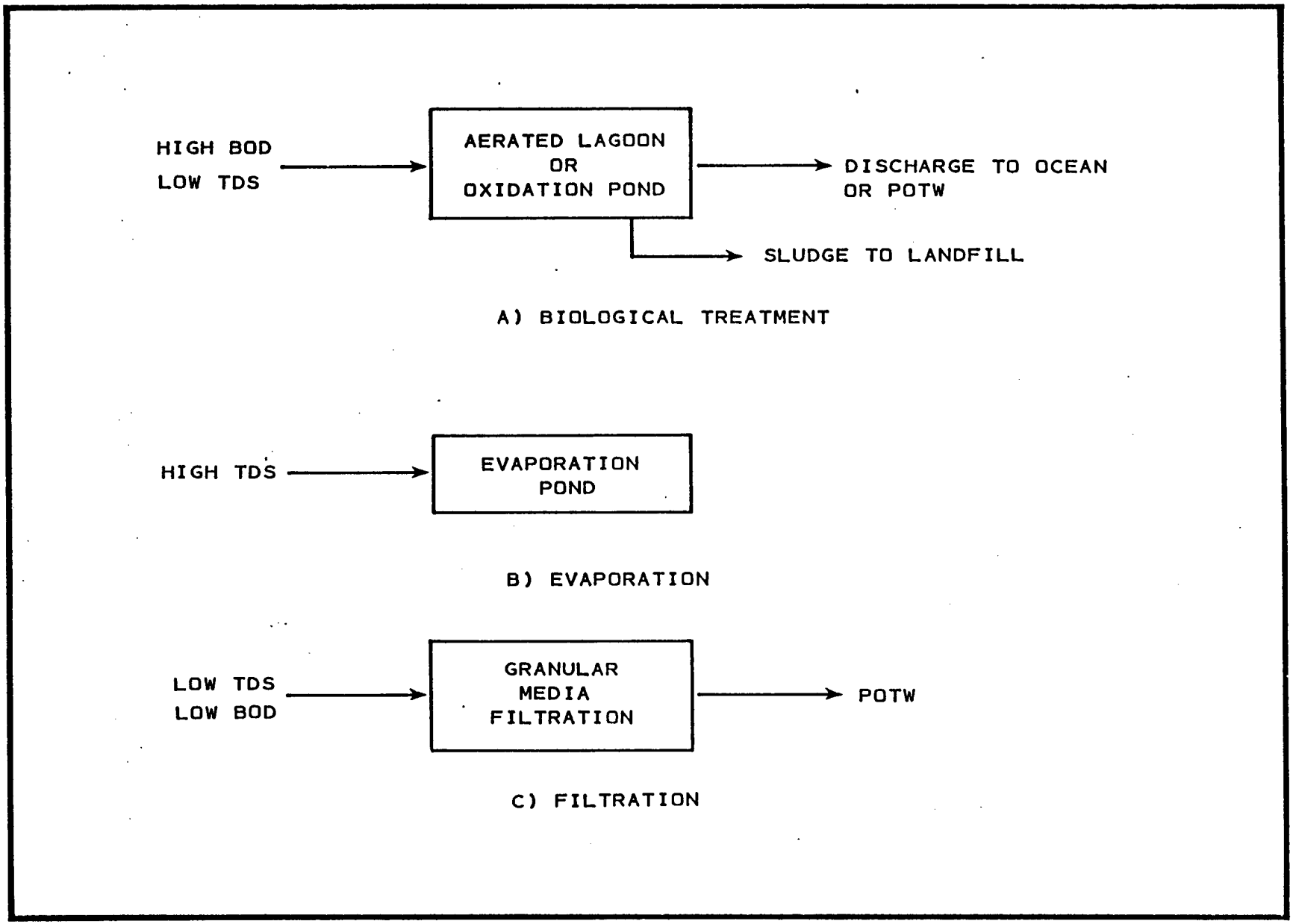

Figure 14. Category 9 treatment options.

nutrient source; otherwise, another treatment option would be advisable. Treated wastewaters could conceivably be discharged to a POTW or possibly directly to the ocean. A sludge would be created, but the amounts appear to be small and would probably require removal and disposal only a few times over the life of the project. Table 19 presents costs for a biological treatment facility.

Since evaporation exceeds precipitation by about 0.6 m (2 ft) in the Port Hueneme area, evaporation provides both a treatment and disposal option. The wastewater is simply allowed to evaporate, leaving dissolved salts behind. For highly contaminated wastewater, the salts could represent a major removal and disposal problem. However, Category 9 wastewaters are relatively dilute. Up to 1 percent solution would leave behind only about 153 m^3 (5,500 ft^3) of salt over the course of the entire project. This is only about 2 percent of the pond volume used for the cost estimate in Table 20. This quantity would not require removal during the course of the project. The major drawbacks to an evaporation pond at Port Hueneme are the potential for ground water contamination and the high degree of urbanization in the area. It might be difficult to locate suitable sites for a pond; in addition, very tight security would be needed to prevent the pond from becoming a public safety hazard.

If the wastewaters turn out to be relatively innocuous in terms of salt and organic content, it might be possible to discharge them directly to a POTW following granular media filtration to remove suspended and colloidal matter. Costs for a granular media filter are presented in Table 21.

10. CATEGORY 10: ACID AND BASE SOLUTIONS NOT CONTAMINATED WITH METAL IONS

Category 10 includes general acid and base wastewaters low in organics and metals. This includes waste oxidizer (N_2O_4) and wastewaters containing oxidizer, which dissociates in water to form nitric acid. For treatment and disposal purposes, it is useful to divide the category into three subcategories: (a) waste oxidizer; (b) wastewaters containing oxidizer; and (c) general acid/base wastewaters. Category 10c is essentially just quench water, although some small amounts of ammonia are included.

Although it can be chemically converted to less hazardous compounds, waste oxidizer is not treatable as a discrete waste. Hydrogen peroxide can be used to convert N_2O_4 to nitric acid, but the reaction is generally too violent to be conducted directly with liquid N_2O_4. One possible solution is to mix the N_2O_4 with water, or to feed water and N_2O_4 simultaneously into a reaction vessel to which hydrogen peroxide can be added. However, such treatment would cause the release of nitrogen oxides to the atmosphere. Scrubbers might be needed to control these emissions. Since the same treatment approach could be used to treat oxidizer

TABLE 19

CATEGORY 9. BIOLOGICAL TREATMENT

System: Aerated lagoon; 2-stage
6' deep (20,000 cf)
surface area = 4,000 sf
Air: mixing controls - 1 hp/10^3 cf; mechanical (floating) surface aerator
Volume treated: 68,340 gal/launch

Capital Cost		1980	1985
Earthwork	10,000 cy	$40,000	$62,000
Liner	6,000 sf	6,000	10,020
Fencing	300 lf	3,000	5,010
Piping		6,000	10,020
Aeration	20 hp	10,000	16,700
Electrical	10%	8,000	13,360
Misc mat'l	10%	8,000	13,360
	Total	$81,000	$130,470

Annual Operating and Maintenance		1980
Power	$.05/HPH x 20 x 8760	$8,800
Labor	1.5 MH/day @$10	5,500
Misc		2,000
		$16,300

Total Annual O&M Per Project Year

1985	1986	1987	1988	1989	1990	1991	1992	1993	1994
$25,270	27,380	29,340	31,460	33,580	35,530	37,490	39,610	41,730	43,680

TABLE 20

CATEGORY 9. EVAPORATION PONDS

System: 2-cell evaporation pond
4-ft deep (allows 2-ft freeboard)
68,000 sf surface area
2-ft evaporation/yr
Volume treated: 68,340 gal/launch

Capital Cost	1980	1985
Clearing & Grubbing ($500/Ac)	$1,000	$1,600
Earthwork (10,000 cy @ $3)	30,000	47,400
Liner (80,000 sf @ $2)	160,000	252,800
Piping & Drainage	20,000	31,600
Fencing (1,100 ft @ $8)	9,000	14,200
Misc	10,000	15,800
Total	$230,000	$316,000

Annual Operating and Maintenance	1980	1980
Labor (1.5 hr/day @ $10)	$5,480	$9,150
Misc	3,000	4,750
Total	$8,480	$13,900

Total O&M by Project Year

1985	1986	1987	1988	1989	1990	1991	1992	1993	1994	Project Total
$13,900	15,300	16,800	18,500	20,300	22,400	24,600	27,100	29,800	32,800	221,500

TABLE 21

CATEGORY 9. GRANULAR MEDIA FILTER

System: Package downflow pressure filters (X2)
Equalization and backwash storage
24-hr treatment time
12 sf filter area (4 gpm/sf)
Volume treated: 68,340 gal/launch

Capital Cost	1980	1985
Package filtration		
Backwash tank		
Pumps and piping		
Electrical and control	$95,000	$158,650
Equalization tank	35,000	58,450
Misc and sitework	10,000	15,800
	$140,000	$232,900

Operating and Maintenance Per Launch		1980
Labor	1.2 mandays/launch @ $10/MH	$120
Power		30
Misc		100
Total		$250

Total Annual O&M Per Project Year

1985	1986	1987	1988	1989	1990	1991	1992	1993	1994
$1,550	2,520	4,500	7,240	7,730	8,180	8,630	9,110	9,600	10,050

wastewaters, it might be possible to feed oxidizer into an oxidizer wastewater/hydrogen peroxide reaction vessel (Figure 15).

Since hydrogen peroxide converts the nitrogen tetroxide to nitric acid, the treated wastewater will still be hazardous on the basis of corrosivity. Thus, the wastewater will require neutralization. The ammonia wastes generated at North VAFB (NVAFB) could be used as part of the neutralization chemicals, although the quantity of ammonia wastes is insufficient to complete the neutralization process. Table 22 presents cost estimates for conversion to nitric acid and neutralization.

The completely treated wastewater will be high in nitrate salts, thus posing problems in terms of land disposal or discharge to a POTW. A better option might be to discharge the treated wastewater to an evaporation basin. The wastewater quantities and salt concentrations over the course of the entire project are not high enough to generate any appreciable sludge quantities requiring removal during the 1985 to 1994 period.

If waste oxidizer is not treated chemically, it will have to be disposed. There are special N_2O_4 burners available to incinerate waste oxidizer. It might be possible to mix waste oxidizer and fuel together in a controlled reaction chamber, and effectively incinerate both wastes. Land disposal is another possibility, but some disposal sites (e.g., Casmalia) will not accept N_2O_4. Also, under RCRA, the oxidizer would have to be rendered nonreactive (by chemical means, perhaps) before being buried.

Category 10(c) is the largest volume waste stream produced by the space shuttle ground operations. The hazardous property of the quench water requiring treatment is its acidity. Simple neutralization with hydroxide or bicarbonate would be sufficient treatment (Figure 15). Difficulties arise in determining where and how the neutralization is to be conducted. On the one hand, the quench water could be pumped to a large evaporation basin and neutralized there. It might be possible to neutralize the quench water in place in the flame buckets. However, there is a possibility for sludge formation in the flame buckets, which would require periodic removal. If the acidity of the quench water is such that it can erode the concrete flame buckets, it might be necessary to include the neutralization chemical in the quench water itself. Adding a caustic neutralizing agent to the quench water before the launch would result in one of three possibilities: (1) there would be a caustic base in the air that could cause damage when descending; (2) it may neutralize part of the HCl cloud; or (3) two-thirds of the caustic used could be wasted as it would evaporate. In this manner, any standing water in the flame bucket would be relatively neutral.

There are several possible disposal options for the treated wastewater. Discharge to a POTW is probably inadvisable because of the salt content of the water and the distance to the nearest sewer lines. Similarly, landspreading (discharge to slope) is

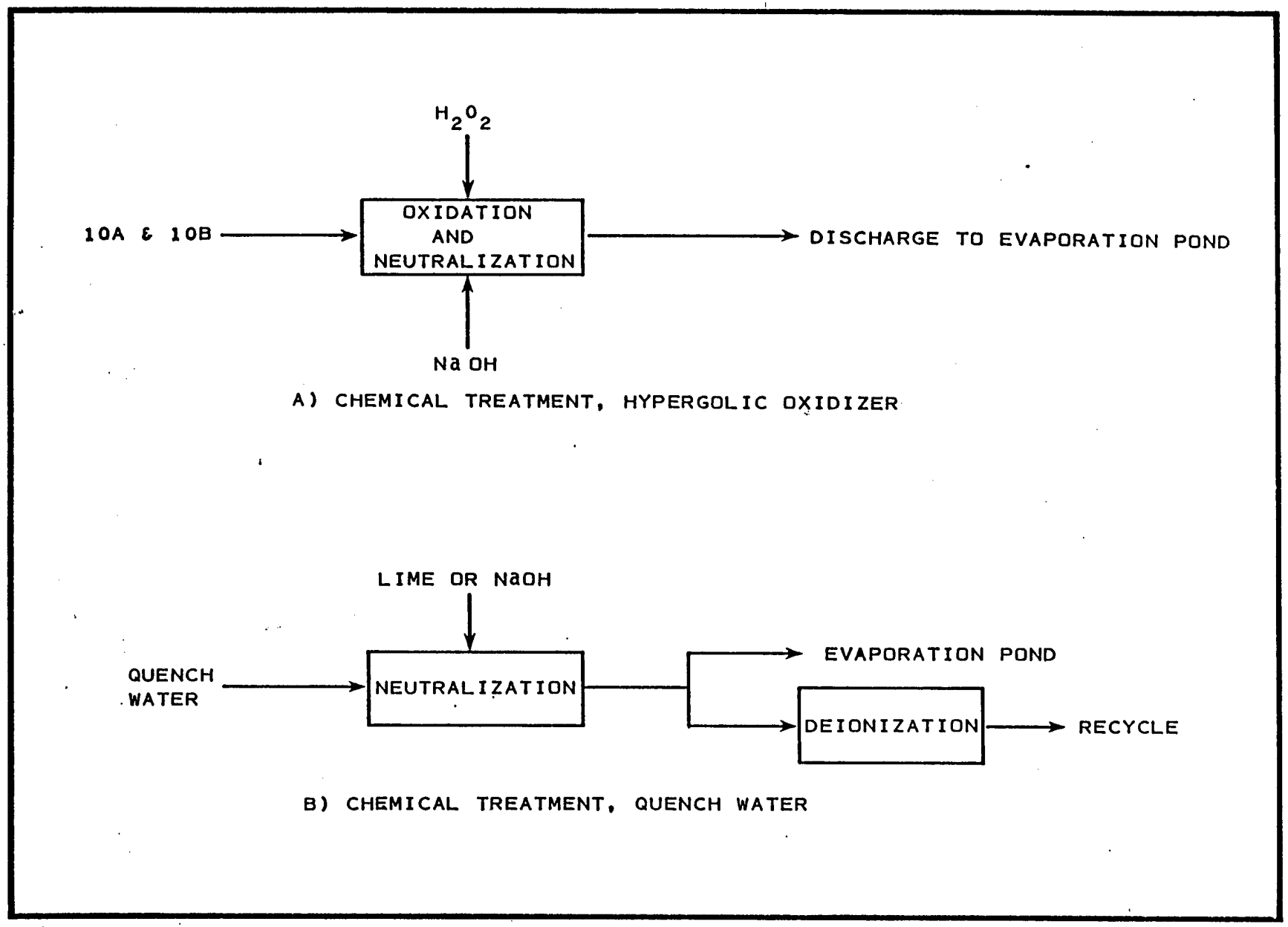

Figure 15. Category 10 treatment options.

TABLE 22

CATEGORIES 10a AND 10b. CHEMICAL TREATMENT

System: Batch process
H_2O_2 and NaOH treatment chemicals
Volume treated: 757 gal/launch at NVAFB*
230 gal/launch at SVAFB
Combined: 987 gal/launch*

Capital Cost

	1980			1985		
	NVAFB	SVAFB	Combined	NVAFB	SVAFB	Combined
Reactor	$7,000	4,000	9,000	11,690	6,680	15,030
Pumps & piping	5,000	4,000	6,000	8,350	6,680	10,020
Chemical feed	6,000	5,000	7,000	10,020	8,350	11,690
Venting	3,000	3,000	4,000	5,010	5,010	6,680
Electrical and instrumentation	8,000	8,000	9,000	13,360	13,360	15,030
Sitework and miscellaneous	5,000	4,000	7,000	7,900	6,320	11,060
Total	34,000	28,000	42,000	56,330	46,400	69,510
System Total		$62,000	$42,000		$102,730	$69,510

Operating and Maintenance Per Launch

	1980		
	NVAFB	SVAFB	Combined
Power	$20	10	30
Labor	80	60	90
Chemicals	1,260	380	1,640
Miscellaneous	200	150	250
Total	$1,560	$600	$2,010
System Total		$2,160	$2,010

Total Annual O&M Per Project Year

Separate Systems:

1985	1986	1987	1988	1989	1990	1991	1992	1993	1994
$13,390	21,770	38,880	62,530	66,740	70,630	74,520	78,730	82,940	86,830

Combined System:

12,460	20,260	36,180	58,190	62,110	65,730	69,350	73,260	77,180	80,800

* Includes 8,959 gal miscellaneous flow spread over 15 launches.

inadvisable, because the salt content is a distinct threat to ground water and the existing vegetation cover. It might also be possible to discharge to the ocean. However, the least troublesome disposal option from a regulatory point of view would be a lined evaporation basin. Evaporation poses no problems to ground or surface fresh water supplies, ocean water, POTW's, or local vegetation. Table 23 presents cost estimates for neutralizing and evaporating quench water. See Table 17 for evaporation pond construction costs.

One other approach worth considering would be to reuse the quench water. Depending on the water quality needed for quench water, it might be possible to reuse the neutralized wastewater directly, at least for a few cycles, before new fresh water would be needed. The concentrated quench water could be evaporated or discharged to the ocean. If higher quality water is needed for quenching, the neutralized quench water could be passed through a deionizer before being pumped to storage. This would greatly reduce the quantity of the wastewater, which is limited under this option to deionizer recharge brines. These brines could be evaporated (in a smaller basin than would be required for the quench water), or discharged to the ocean.

11. CATEGORY 11: FUEL VAPOR SCRUBBER WASTES

Category 11 includes effluent from hypergolic fuel (hydrazine, MMH, UDMH) vapor scrubbers. There are a total of six scrubbers, four of which generate a maximum capacity of 400 gal per launch, and two, a maximum capacity of 200 gal per launch. For the purposes of this study, it was assumed that scrubbers located at the NVAFB generate a total of 800 gal of effluent per launch, whereas those at the SVAFB generate 210 gal per launch; Port Hueneme scrubbers generate 50 gal per launch. The scrubber effluent is expected to contain 1 to 2 percent hydrazine; in addition, it may contain some hydrazine reaction products.

This waste category is essentially the same as Category 2b, due to the change in the type of scrubbers used. Namely, at the time that this document was developed, citric acid was the scrubber liquor planned to be used. Subsequently, however, water-based scrubbers were substituted for the citric acid scrubbers.

There appears to be only one basic treatment option: chemical oxidation (Figure 16). Chemical treatment would begin with neutralization, followed by chemical oxidation, perhaps with hypochlorite or hydrogen peroxide. It is impossible at this point to determine what types of reaction products might result from such treatment. Depending on the nature of these reaction products, the treated waste might be dischargeable to a POTW or an evaporation basin.

Table 24 presents cost estimates for typical chemical treatment of scrubber effluent wastes. The cost for treating Port Hueneme Category 11 wastes, separate from other wastes within

TABLE 23

CATEGORY 10c. NEUTRALIZATION

System: Neutralization of quench water with $Ca(OH)_2$ or NaOH
Volume treated: 150,000 gal/launch at treatment plant
150,000 gal/launch in place

Capital Cost

	1980		1985	
	Treatment Plant	In Place	Treatment Plant	In Place
Tanks and mixers	55,000	12,000	91,850	20,030
Pumps and piping	34,000	30,000	56,780	50,100
Chemical feed	13,000	13,000	21,710	21,710
Electrical & Instrumentation	18,000	16,000	30,060	26,720
Miscellaneous	28,000	22,000	44,240	34,760
Total	$148,000	$93,000	$244,640	$153,330

Operating and Maintenance Per Launch

	1980	
	Treatment Plant	In Place
Labor	$200	$160
Power	40	30
Chemicals	180	180
Miscellaneous	400	300
Total	$820	$670

Total Annual O&M Per Project Year

Treatment Plant:

1985	1986	1987	1988	1989	1990	1991	1992	1993	1994
$5,080	8,270	14,760	23,740	25,340	26,810	28,290	29,890	31,490	32,960

In Place:

$4,150	6,750	12,060	19,400	20,700	21,910	23,120	24,420	25,730	26,930

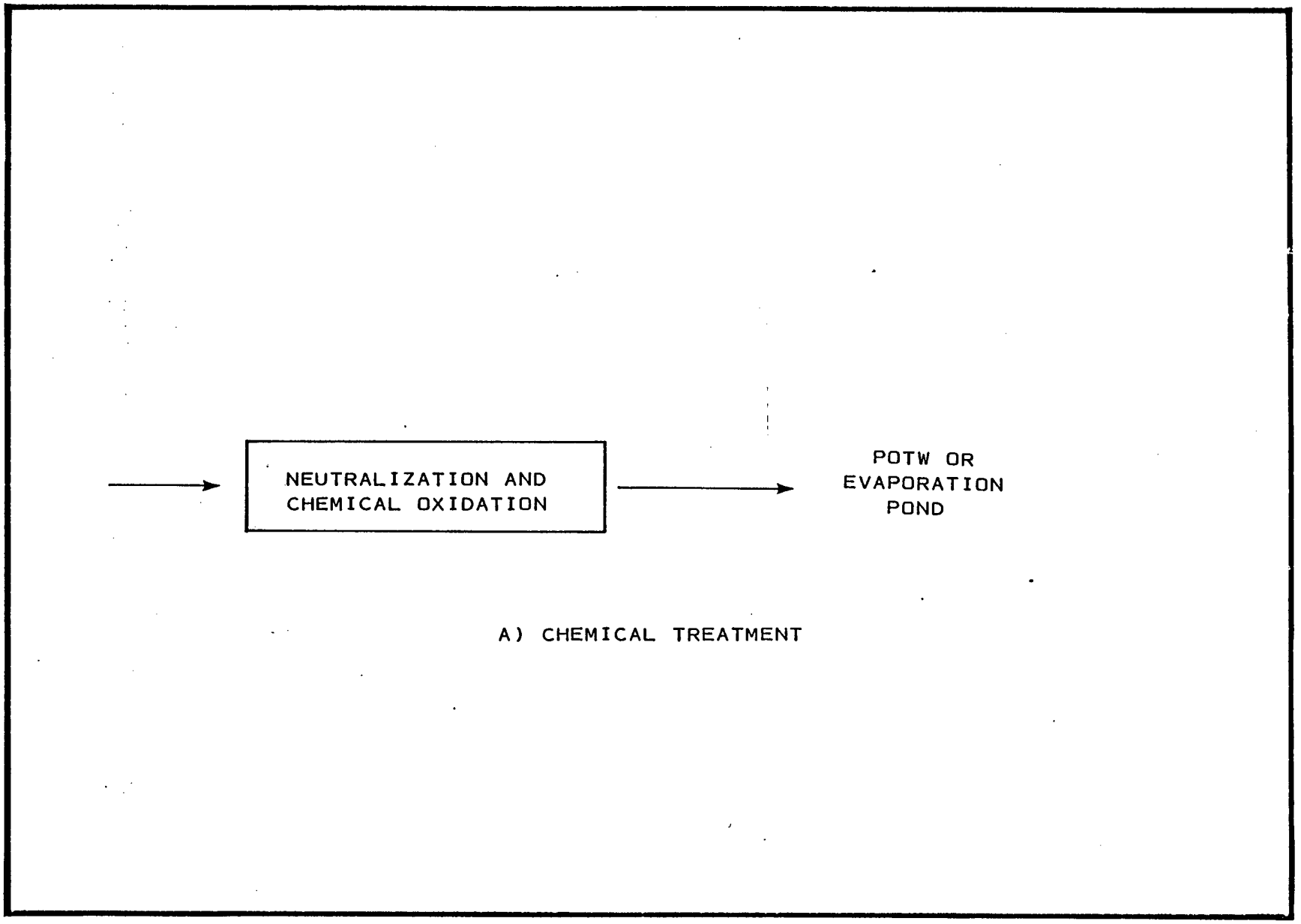

Figure 16. Category 11 treatment option.

TABLE 24

CATEGORY 11. CHEMICAL TREATMENT

System: Neutralize with NaOH, oxidize with batch process
Port Hueneme Category 11 wastes included only in combined system
Volume treated: 800 gal/launch at NVAFB
210 gal/launch at SVAFB
Combined: 1,060 gal/launch

Capital Cost

	1980			1985		
	NVAFB	SVAFB	Combined	NVAFB	SVAFB	Combined
Reactors	7,000	4,000	9,000	11,690	6,680	15,030
Pumps & piping	5,000	4,000	6,000	8,350	6,680	10,020
Chemical feed	6,000	6,000	7,000	10,020	10,020	11,690
Venting	3,000	3,000	4,000	5,010	5,010	6,680
Electrical	8,000	8,000	9,000	13,360	13,360	15,030
Sitework & misc	5,000	4,000	7,000	7,900	6,320	11,060
Total	34,000	28,000	42,000	56,330	48,070	69,510
System Total		62,000	42,000		104,400	69,510

Operating and Maintenance Per Launch

	1980		
	NVAFB	SVAFB	Combined
Power	$20	10	30
Labor	80	60	90
Chemicals	500	230	750
Miscellaneous	200	150	250
Total	800	450	1,120
System Total		$1,250	$1,120

Total Annual O&M Per Project Year

Separate Systems:

1985	1986	1987	1988	1989	1990	1991	1992	1993	1994
$7,750	12,600	22,500	36,180	38,630	40,880	43,130	45,560	48,000	50,250

Combined System:

$6,940	11,290	20,160	32,420	34,610	36,630	38,640	40,820	43,010	45,030

Category 11 or from other categories, is not included. If included, the capital costs for the Port Hueneme scrubber effluent would be on the order of $10,000 for 190 l (50 gal) per launch. This is considered unreasonable as a separate cost item, and as such, is not developed individually.

12. CATEGORIES 13 AND 14: COMBUSTIBLE AND NONCOMBUSTIBLE SOLID WASTES

a As solid wastes, Categories 13 and 14, combustible and noncombustible solid wastes, respectively, are not "treatable" in the sense that treatment is being used in this report. Wastes from both categories can be disposed of by landfilling, or, in the case of Category 13, by incineration, with or without heat recovery.

13. CATEGORY 15: MISCELLANEOUS WASTEWATERS

Category 15 contains wastewaters not readily classifiable in any other treatment category. These include emergency eyewash and shower wastewaters (EEW&S), organic solvent-contaminated wastewaters, insulation- and paint-contaminated wastewaters (IW), and general cleanup wastewaters. In general, these wastewaters have a high organic loading (up to 1 percent organics on the average), and a low metal content. An exception is the insulation- and paint-contaminated wastewater from Port Hueneme, which might contain organometallic compounds washed out of the paints.

Many of the organic contaminants in Category 15 wastewaters are volatile, and would vaporize in an evaporation basin. Likewise, the high organic loadings and the presence of some compounds which are toxic to treatment plant organisms could lead to POTW overloads or upsets. Thus, these wastewaters cannot be discharged to an evaporation basin or POTW without some pretreatment or blending with other waste streams. There are essentially three treatment options available: activated carbon filtration, biological treatment, and chemical oxidation (Figure 17).

Many of the organic contaminants are removable with a carbon filter. In fact, with the possible presence of organometallic contaminants, it might be necessary to use a carbon filter as a polishing step, at least for Port Hueneme Category 15 wastewaters. Carbon filtration, possibly preceded by conventional filtration or settling to remove suspended solids, could remove over 90 percent of the organic compounds in the wastewater. The treated wastewater could be readily discharged to a POTW or evaporation pond. The cost estimates in Tables 25, 26, and 27 are based on an Air Force-constructed and -operated system, but a reduction in cost could be achieved by employing one of the filtration services, such as Calgon. These services will rent all of the necessary equipment, and will service it regularly,

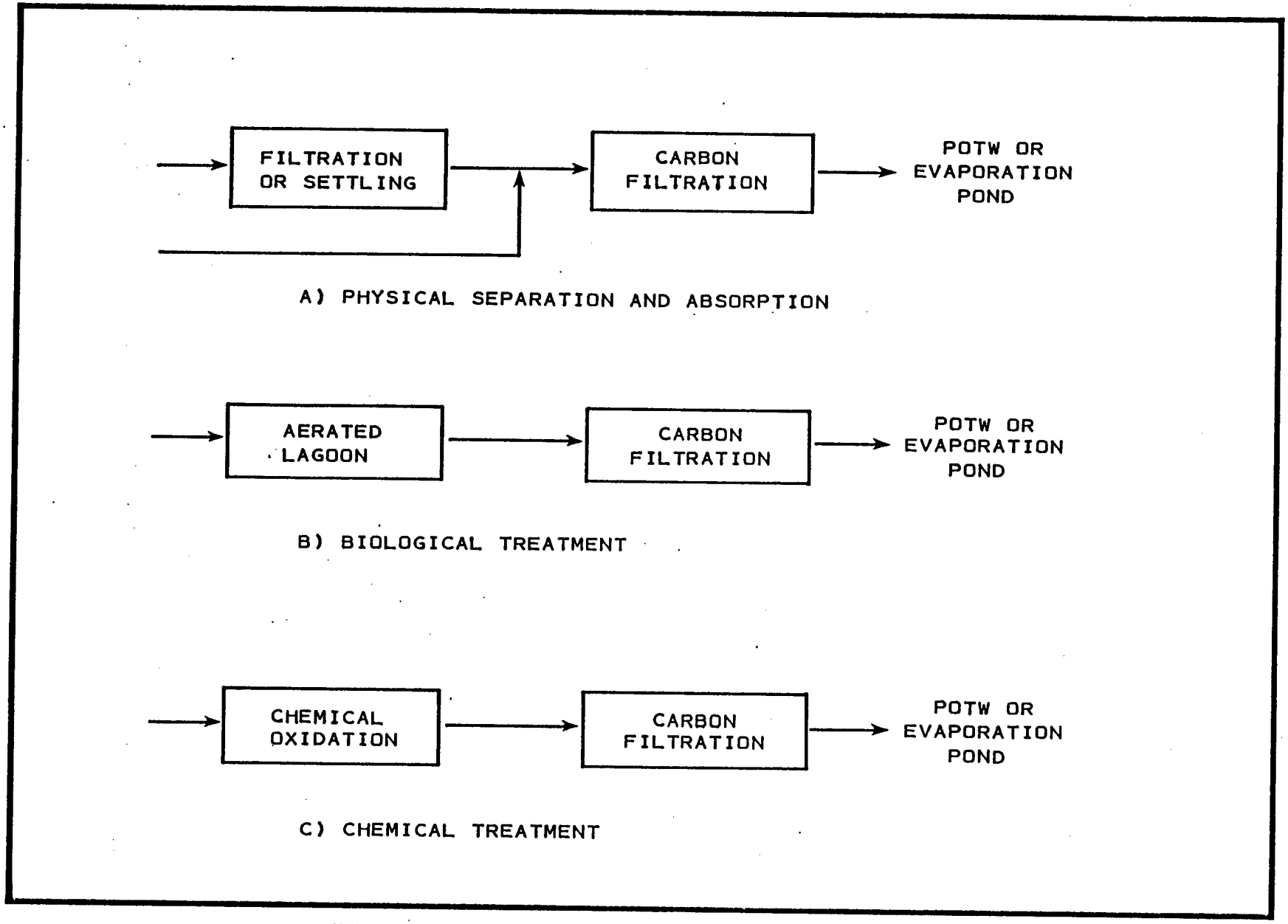

Figure 17. Category 15 treatment options.

TABLE 25

CATEGORY 15. FILTRATION AND ACTIVATED CARBON
OPTION 1

System: Filter @ 4 gpm/sf over 6 hr for small and 24 hr for large backwash waste storage
Carbon @ 30 min contact - 200 lb/mill-gal
Equalization basin for one batch operation
Small system: 1 filter and 1 carbon column
Large system: 2 filters each for full load and 2 carbon columns each for 1/2 flow
Volume treated: 2,264 gal/launch at NVAFB
1,560 gal/launch at SVAFB
49,120 gal/launch at PH

Capital Cost Option 1 (Separate Treatment at NVAFB, SVAFB, Port Hueneme)

	1980			1985		
	NVAFB	SVAFB	PH	NVAFB	SVAFB	PH
Filtration System	(2 sf) 10,000	(2 sf) 10,000	(9 sf) 78,000	16,700	1,6700	130,260
Carbon System	(3sf x 9f) 14,000	(3sf x 6f) 14,000	(6sf x 12f) 102,000	23,380	23,380	170,340
Equalization	3,000	3,000	25,000	5,010	5,010	41,750
Sitework & Misc	3,000	3,000	15,000	4,740	4,740	23,700
Total	30,000	30,000	220,000	49,830	49,820	366,050
System Total			$280,000			$465,710

Operating and Maintenance Per Launch

	1980		
	NVAFB	SVAFB	PH
Power	$1.5	$1.5	$36
Labor	20	20	80
Carbon	0.5	0.5	8
Misc	30	30	200
Total	$52	$52	324
System Total			$428

Total Annual O&M Per Project Year

1985	1986	1987	1988	1989	1990	1991	1992	1993	1994
$2,650	4,310	7,700	12,390	13,230	14,000	14,770	15,600	16,440	17,210

TABLE 26

CATEGORY 15. FILTRATION AND ACTIVATED CARBON
OPTION 2

System: All Category 2b wastes treated together
Assume hydrazine biodegradable in 15-30 days
Volume treated: 1,010 gal/launch

Capital Cost Option 2 (separate treatment at VAFB and Port Hueneme)

	1980		1985	
	VAFB	PH	VAFB	PH
Filtration System	$12,000	$78,000	$20,040	$130,260
Carbon System	15,000	102,000	25,050	170,340
Sitework & Misc	3,000	15,000	4,740	23,700
Equalization	4,000	25,000	6,680	41,750
Total	$34,000	$220,000	$56,510	$366,050
System Total		$254,000		$422,560

Operating and Maintenance Per Launch

	1980	
	VAFB	PH
Power	$1.50	$36
Labor	20.00	80
Carbon	1.00	8
Misc	40.00	200
Total	$62.50	324
System Total		$387

Total Annual O&M Per Project Year

1985	1986	1987	1988	1989	1990	1991	1992	1993	1994
$2,400	3,900	6,960	11,190	11,940	12,640	13,330	14,090	14,840	15,540

TABLE 27

CATEGORY 15. FILTRATION AND ACTIVATED CARBON
OPTION 3

System: All Category 2b wastes treated together
Assumes hydrazine biodegradable in 15-30 days
Volume treated: 1,010 gal/launch

Capital Cost Option 3 (all wastes treated at same facility - PH)

	1980	1985
Filtration System	$81,000	$135,270
Carbon System	105,000	175,350
Sitework and Miscellaneous	15,000	23,700
Equalization	26,000	43,420
Total	$227,000	$377,740

Operating and Maintenance Per Launch	1980
Power	$36
Labor	80
Carbon	9
Misc	200
	$325

Total Annual O&M Per Project Year

1985	1986	1987	1988	1989	1990	1991	1992	1993	1994
$2,020	3,280	5,850	9,410	10,040	10,630	11,210	11,850	12,480	13,070

including replacement of exhausted carbon. Costs of the service would vary, depending on the actual strength of the wastewater and the required frequency of carbon regeneration.

Most of the organic compounds in Category 15 wastewaters are amenable to biological treatment. In general, however, the Category 15 flows from NVAFB and South VAFB (SVAFB) are too small for the types of biological treatment considered feasible for these wastes. Because of the high organic loadings and intermittent flow characteristics, such treatment methods as conventional activated sludge or trickling filter are not feasible. An aerated lagoon is far more adaptable to the Category 15 wastewaters. The smaller lagoons, however, are too large to effectively treat NVAFB and/or SVAFB Category 15 wastewaters alone. They could conceivably be combined with the Port Hueneme Category 15 wastes in a single lagoon, or mixed with some other VAFB wastewaters destined for lagoon treatment. Table 28 presents cost estimates for treating both the combined VAFB-Port Hueneme Category 15 wastewaters, and Port Hueneme wastes alone.

Another approach could involve treatment of these wastes with a chemical oxidant to oxidize the organics into simpler, more readily degradable compounds. However, without firmer knowledge of the identity of the likely organic contaminants, it is impossible to specify an oxidant or to conceptualize a chemical treatment system. Waste hypergolic oxidizer could be used to oxidize many of the organics, but this process would require testing for verification. To ensure adequate removals, chemical treatment of Category 15 wastewaters may require carbon filtration as a polishing step.

TABLE 28

CATEGORY 15. AERATED LAGOON AND FILTRATION

System: Aerated lagoon; 2-stage
6' deep (20,000 cf)
Surface area = 4,000 sf
Air: mixing controls - 1 HP/10^3 cf mechanical (floating) surface aerator
All wastewaters treated at Port Hueneme
Volume treated: 2,264 gal/launch at NVAFB
1,560 gal/launch at SVAFB
49,120 gal/launch at PH
Combined: 52,944 gal/launch

Capital Cost	1980	1985
Earthwork	$32,000	$50,560
Liner	5,000	8,350
Fencing	2,000	3,340
Piping	5,000	8,350
Aeration	8,000	13,360
Electrical	7,000	11,690
Carbon Filter System	105,000	175,350
Miscellaneous & Sitework	8,000	12,640
Total	$172,000	$283,640

Operating and Maintenance Per Launch	1980
Power	$490
Labor	310
Carbon	75
Misc	170
Total	$1,045

Total Annual O&M Per Project Year

1985	1986	1987	1988	1989	1990	1991	1992	1993	1994
$6,480	10,530	18,810	30,250	32,290	34,170	36,050	38,090	40,130	42,010

SECTION V

HAZARDOUS WASTE DISPOSAL OPTIONS

1. INTRODUCTION

This section presents alternatives that could be used for the ultimate disposal of hazardous wastes generated by the STS-VAFB ground operations. Included are both on-site and off-site alternatives for land disposal and incineration. In addition to descriptions and engineering and/or economic evaluations of these alternatives, conceptual designs are provided for on-site landfilling and surface impoundments.

Since the transport of wastes from the generator to the final disposal site is an integral part of the overall waste disposal system, off-site transportation aspects of STS-VAFB hazardous waste management are examined. This delineation includes surveys of waste haulers servicing the VAFB-Port Hueneme area, types and sizes of equipment used by these haulers, types of wastes to be handled, and unit transportation fees for the most probable disposal sites.

2. ON-SITE DISPOSAL OF WASTES BY LANDFILLING AND PONDING

Examination of the types and volumes of hazardous wastes to be generated by the STS-VAFB program reveals that disposal of these wastes via on-site impoundments (i.e., ponding and landfilling) is a viable alternative. It is conceivable that on-site pond(s) may be used for storage/treatment/disposal of high-volume, easily treatable waste streams. Meanwhile, an on-site Class I landfill may be constructed for placement of the wastes considered economically infeasible for treatment.

The following delineation outlines the regulations governing siting and operation of Class I landfills and hazardous waste surface impoundments, and discusses the feasibility for the construction of such facilities at VAFB.

a. Governing Regulations

The siting and operation of hazardous waste disposal facilities by landfilling and/or ponding is governed by both state and federal regulations.

Subtitle C of RCRA has established a federal program for comprehensive hazardous waste management. The interim RCRA standards, which became effective November 19, 1980, address the following requirements:

- Administrative requirements.
- Waste analysis.
- Ground water monitoring.
- Closure and post-closure care.
- Financial considerations for closure and post-closure care.
- Handling of ignitable, reactive, and incompatible wastes.
- Use of cells.
- Run-on, runoff considerations.
- Wind dispersal.
- Leachate control.
- Placement of liquid wastes and containers.

The anticipated benefits of this regulatory program include a lessening of the overall occurrence of ground water, surface water, and air pollution, and a resultant decrease in the effects of faulty or inconsistent hazardous waste management and disposal. States may seek authority from the U.S. EPA to carry out this program. The State of California, which currently has an active program, has reportedly applied or intends to apply for both interim and final authority to regulate hazardous waste management within its boundaries. The lead agency is the California Department of Health Services, Hazardous Material Management Section.

An overview of those portions of the California regulations pertinent to the siting and operation of a Class I landfill or surface impoundment disposal facility is provided in the following paragraphs, coupled with a comparison of the California regulations with the interim RCRA standards. The general policy of the State of California with regard to land disposal of hazardous waste is provided in Appendix C by excerpts from "Waste Discharge Requirements for Nonsewerable Waste Discharge to Land; Disposal Site Design and Operation Information" (prepared by the State of California, State Water Resources Control Board, reprinted January 1978).

The California standards for development of a hazardous waste land disposal facility are thorough and comprehensive,

addressing the same general considerations as the interim RCRA standards, albeit in the form of specific technical requirements. The final technical standards mandated by RCRA have not yet been released by the U.S. EPA. Thus, although a detailed comparison of federal and California standards is impossible, it appears likely that the State of California will receive interim authority for hazardous waste management.

The existing hazardous waste management program in California mandates a thorough technical evaluation of potential Class I land disposal sites and surface impoundments in order to determine their suitability. The ultimate suitability of a site is largely evaluated on the basis of its natural geologic setting. The natural site conditions must provide adequate barriers between the disposal site and ground water to preclude the vertical migration of leachate. A site must be situated in a stable geologic setting so that, once emplaced, the waste is not disturbed, and the integrity of the site is not threatened by natural phenomena.

In addition, lateral leachate flow must be prevented. Although lateral hydraulic barriers may be man-made, the feasibility and design of such barriers must be addressed. Any leachate generated within a Class I land disposal area must either be removed and treated, or remain permanently within the disposal area. By definition, Class I disposal sites do not possess the potential for hydraulic continuity with the surrounding ground and surface waters. Thus, infiltration and run-on/runoff control are important considerations.

The California standards have been utilized in this report to evaluate the on-site disposal option for two reasons:

- They are specific and technical in nature, providing a useful vehicle for establishing specific site selection criteria, whereas the interim RCRA standards are general in nature and less useful for this purpose.

- It is anticipated that sites found to be suitable under California standards will likely comply with RCRA standards.

b. Site Investigations

In order to assess the feasibility of developing on-site hazardous waste land disposal facilities, a preliminary geologic/hydrogeologic investigation of the VAFB site was conducted.

The investigation involved the review and synthesis of available topographic, geologic, hydrogeologic, pedologic, and land use information. No on-site reconnaissance or explorations were made in conjunction with this investigation. The following types of information have been reviewed and evaluated, as mandated by the State of California and the U.S. EPA, to fulfill the

general siting guidelines and the minimum standards for hazardous waste disposal facilities:

- Geologic conditions:

  - Stratigraphy
  - Structure
  - Lithology.

- Hydrogeologic conditions:

  - Known and/or potential ground water supply aquifers
  - Ground water supply wells
  - Permeability of natural soils and bedrock materials.

- Slope and topographic considerations:

  - Surficial drainage.

- Geologic hazards:

  - Flooding
  - Faulting.

- Stability considerations:

  - Landslide potential
  - Erosion potential
  - Liquefaction potential.

c. Exempted Areas

After establishing the overall siting criteria, a study of this type should eliminate from consideration those portions of the study area deemed unsuitable for the development of on-site impoundments for hazardous wastes. Based on the standards previously discussed, the following general characteristics are deemed adequate for this elimination:

- Areas within the 100-year floodplain.

- Areas known to overlie a developed or potentially developable ground water resource.

- Areas contributing recharge to a usable ground water resource.

- Coastal areas subject to erosion.

- Areas with faults known or suspected to be active.

- Areas subject to landslides and/or other significant stability problems.

Areas within the boundaries of VAFB which currently or potentially possess one or more of the aforementioned characteristics are depicted on Plate 1.* Substantial land within the base boundaries has been eliminated from consideration by application of these exclusionary criteria, which are directly based on the California state requirements for siting of hazardous waste land disposal sites. The second and third listed criteria, hydrogeologic conditions, and slope and topographic considerations, could be considered conservative; however, these were adopted for this study after careful consideration of the developed and developable ground water resources of the area adjacent to the Santa Ynez River. A conservative view with regard to these potentially vulnerable and relatively extensive ground water resources appears to be warranted.

d. Evaluation of Areas Not Exempted on the Basis of Exclusionary Criteria

The portions of VAFB remaining after identification of the exempted areas were subjected to more detailed scrutiny on the basis of available soils, and geologic and hydrogeologic information. The purpose of this screening was to identify those areas most suitable for the proposed hazardous waste land disposal facilities. Areas within the VAFB boundaries with the greatest potential for such development are shown on Plate 2, which is based on SCS's interpretation of the available geologic and pedologic information for VAFB.

Surficial soil characteristics which were considered in compiling Plate 2 included:

- Permeability.
- Depth of soil.
- Texture.
- Parent material.

Initially, seven soil groups were evaluated. Two of these groups were deemed to represent geologic settings potentially capable of meeting the siting standards established by the State of California for Class I landfill and hazardous waste surface impoundment facilities.

Group I soils exhibit the following characteristics:

- Very low permeability (based on infiltration rates in the range of 1.4×10^{-4} to 4.2×10^{-5} cm/sec).

* All plates are folded and inserted in manila pockets at the back of this report.

- Unified soils classification of CL, CH, or OH (see Glossary).

- Over 30 percent of the soil passes the No. 200 sieve.

- Sandy soils underlain at the depth of 5 to 10 feet with thick clays.

Group II soils exhibit the following characteristics:

- Textural description of clay, clay loam, silty loam, or shaley loam.

- Slow to medium infiltration rates.

The bedrock units underlying the areas available for consideration were grouped according to their probable primary permeability, based on lithic descriptions available in the literature. The potential effects of secondary permeability were considered, but sufficient information is not available to permit consistent evaluation of the presence or absence of pervasive joint patterns or other fractures. A stratigraphic column with brief lithic descriptions typical of the study area and two interpretive geologic sections for the central and southern portions of the base are presented in Figures 18 and 19.

The geologic units believed to possess low primary permeability have been divided into two groups. Group I, considered potentially the most favorable for the proposed development, consists of the following:

- Sisquoc Formation.
- Monterey Formation.
- Tranquillon Formation.
- Rincon Formation.
- Cozy Dell Formation.
- Anita Formation.

Group II, while less favorable, may locally provide appropriate conditions for the proposed development, and consists of:

- Vaqueros Formation.
- Sespe-Alazria Formation.
- Espada Formation.
- Honda Formation.
- Franciscan Formation.

Each of the above-listed formations appears to have the potential for exhibiting the appropriate permeability and homogeneity to meet the State of California minimum technical standards for hazardous waste land disposal sites with regard to hydrogeologic isolation. The Group I formations are considered slightly more favorable than Group II on the basis of texture and uniformity. However, specific information regarding the permeability,

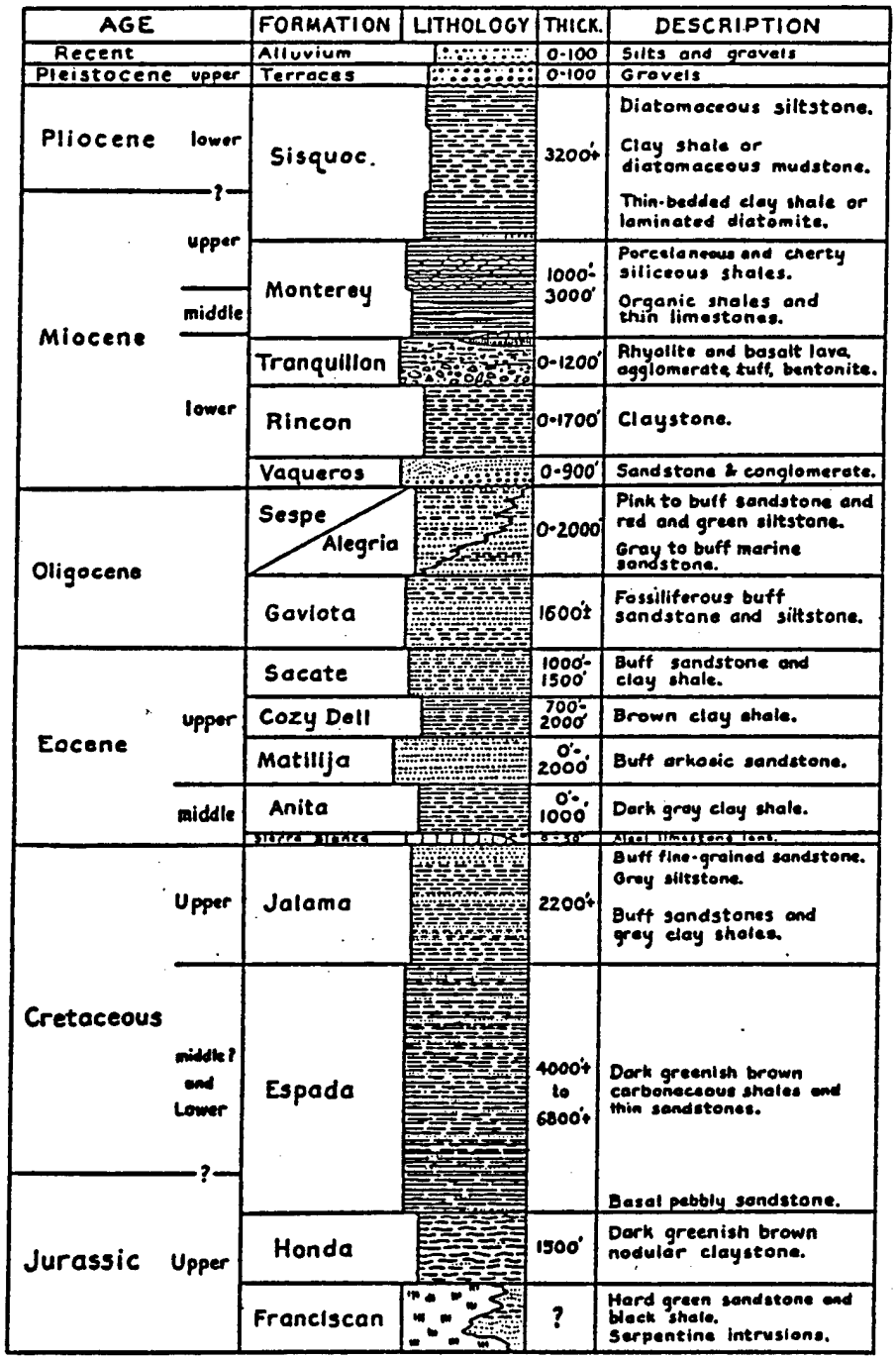

DIBBLEE, T.W. JR.
BULLETIN 150, 1950.

Figure 18. General stratigraphic column of Vandenberg AFB, Santa Barbara County.

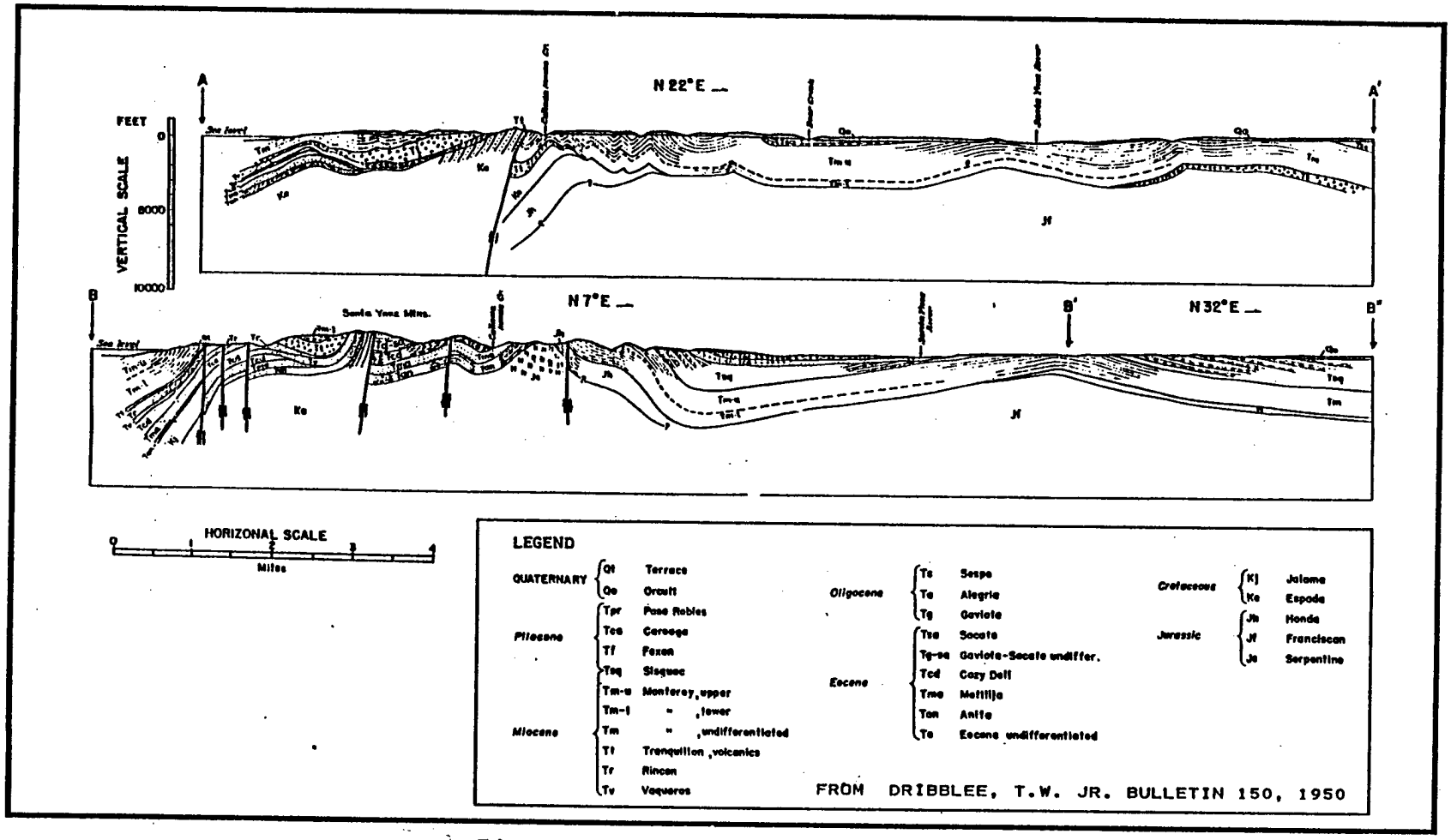

Figure 19. Geologic profile.

texture, and homogeneity of these units was not found in the literature by the completion of this study.

The areal distribution of each of these potentially favorable soils and lithic groups is shown on Plate 2. Areas exempted on the basis of level screening are also designated. Undesignated areas on this map are comprised of soil-bedrock associations probably unsuitable for development of Class I disposal facilities. The potentially suitable map associations have the following characteristics:

- Association 1 - Areas with Group I soils overlying Group I lithic units.
- Association 2 - Areas with Group II soils overlying Group I lithic units.
- Association 3 - Areas with Group I soils overlying Group II lithic units.
- Association 4 - Areas with Group II soils overlying Group II lithic units.
- Association 5 - Areas with unsignificant surficial soils but Group I lithic units.
- Association 6 - Areas with insignificant surficial soils but Group II lithic units.

Map Association 3 occurs very little in the study areas. Association 5 occurs only in the northern end of the site at one location, and Association 6 was not found to occur at all within the study area.

Associations 1, 2, and 5 appear to define those portions of the study area that have the greatest potential for meeting the specific siting criteria which have been established by the State of California for development of Class I land disposal facilities. Associations 3 and 4, though considered less favorable, do possess the potential for meeting those criteria. The nature of the available information precludes more detailed evaluation of these potentially suitable areas at this time.

e. Siting Conclusions

It has been determined that:

- Substantial lands potentially suitable for Class I land disposal and surface impoundment facility development exist within the boundaries of VAFB.

- Actual acreage requirements of a facility capable of handling the volume of hazardous wastes anticipated to be generated during the space shuttle program will be relatively modest.

Based on these determinations, it is concluded that, for the purposes of this study, the on-site disposal option appears technically viable and warrants consideration.

In view of this conclusion, it seems appropriate to discuss briefly the steps necessary to select an actual site. The criteria that must be evaluated during site selection include all those previously discussed as well as specific economic considerations, such as site development, access road construction, and waste transport distance.

If the on-site disposal option is determined to be effective, a multiphase study oriented in the following manner would be appropriate:

1. Additional evaluation of the potentially suitable areas on the basis of economic and topographic exclusionary criteria.

2. Evaluation of areas remaining after Step 1 above on the basis of information to be gathered through remote sensing techniques and site reconnaissance. The purpose would be to select those candidate sites which warrant preliminary geologic and hydrogeologic investigations.

3. Completion of the preliminary investigations and selection of one or more sites for in-depth investigation requisite to formal design and the permitting process. (The detailed technical studies required for the design and permitting of hazardous waste land disposal sites are included in Appendix C.)

Conceptual designs for an on-site landfill and surface impoundment are presented in the following subsections, along with discussions on pertinent design, construction, and operational features, and economic factors. It should be noted, however, that these conceptual designs could be used as a planning tool, but would not provide all of the necessary information to completely design and manage an on-site disposal facility for hazardous wastes generated from the project.

An examination of the characteristics of the wastes generated by the STS-VAFB program revealed that not all waste streams of each waste category would be disposable via impoundment (i.e., ponding and landfilling). For instance, in waste Category 10, nitrogen tetroxide wastes should not be impounded because of the potential gas generation.

For the purpose of developing conceptual designs for in situ land disposal facilities, Table 29 was compiled to list waste categories applicable to land disposal methods. Waste quantities shown in this table (under both normal and contingency conditions) for each applicable waste type were used for the development of subsequent conceptual designs of both Class I landfills and surface impoundments.

f. Conceptual Design of On-Site Class I Landfill

The elements included in the conceptual design detailed below reflect design criteria requirements as specified by the governing state and federal regulations.

(1) Basis for Design

The basic management objective for the design and operation of an on-site Class I landfill is assumed to be land disposal of hazardous wastes generated from the STS project in order to prevent potentially adverse environmental effects on local ground and surface waters. The following conceptual design has thus been developed by taking into consideration the proper disposal of drummed liquid wastes.

It is further assumed that a specific site has already been selected and that the ideal site selection criteria can be satisfied (as discussed in the preceding sections on geological surveys). In addition, the selected site would exhibit the following features:

- Terrain at the site and in the surrounding area is relatively flat, with the slope ranging from 2 to 5 percent.
- On-site soils have a high clay content.

(2) Site Area and Volume Requirements

An estimated 11,648 m^3 (411,000 ft^3) of waste Categories 1, 2a, 3, 5, 8, 11, 13, and 14, would require land disposal throughout the project. Liquid waste would be drummed prior to disposal.

Depending on the type of waste to be disposed of, the landfill space utilization efficiency could vary from 40 to 77 percent. For the hypothetical site, a 50 percent fill efficiency is assumed. Thus, approximately 24,000 m^3 (846,000 ft^3) of site disposal capacity would be required.

Since the quantity of wastes to be landfilled is relatively small and the unused land within VAFB is ample, a shallow fill would be advantageous for maintaining a thick soil layer between the fill floor and the underlying ground water. For this example site, a depth of 3 m (10 ft) is assumed. Approximately 0.8 ha (2 ac) of site surface area is required for disposal purposes.

TABLE 29

ON-SITE LAND DISPOSAL OPTIONS

Disposal Method	Waste Category	Estimated Quantity (M^3)		
		Base Line†	Contingency†	Total
Surface Impoundment	2b#,9,10,15	129,045	0	129,045
Landfill*		11,134	514	11,648
Subcell No. 1	1,2a#,3,11,13,14	10,572	514	11,086
Subcell No. 2	5	542	0	542
Subcell No. 3	8	20	0	20

* Waste segregation is done by constructing isolated cells in the landfill.

† Wastes generated at Port Hueneme under the space shuttle project are assumed to be hauled to Vandenberg AFB.

\# 2a is waste fuels, and 2b is wastewater containing waste fuels. Both waste streams are classified under waste Category 2.

An additional 2 ha (5 ac) is assumed to be required for support functions, including office and storage buildings, on-site access roads, drainage facilities, and a 60-m (200-ft) buffer zone around the active portions of the site. However, the area for support functions need not be restricted in the case of soil Groups I and II.

(3) Site Planning and Design

After a site is selected, an engineering development plan is prepared. This plan generally consists of drawings, written specifications, and an accompanying report. Location and design of waste disposal cells, drainage facilities, access roads, leachate control facilities, and other design considerations are included. Results of geophysical investigations, procedures to procure site permits, recommendations for equipment purchase, and a description of recommended operational procedures are also integral parts of site planning and design efforts. The design report may also include recommended procedures for implementing a public information and education program.

Figure 20 presents an artist's conception of the hypothetical site layout. For the final design, several plan and cross-section drawings would be provided showing intended site features at various phases in the project. Details such as site preparation procedures, location of utilities and fences, and fill cell construction methods would be included. These and other site design considerations are discussed below.

(4) Site Preparation

A disposal site is generally prepared by clearing shrubs, trees, and other obstacles that would hinder vehicle traffic and landfilling operations. Obstructions such as boulders would be moved to facilitate construction of buildings, roads, utilities, and drainage structures.

(a) Clearing and Grubbing

Trees and brush that hinder landfill equipment or trucks would be removed. Brush and tall grass in working areas can be rolled over or grubbed. When possible, natural stands of trees or brush would be left in nonworking areas to improve appearance and to control erosion and dust in areas yet to be filled.

(b) Access Road

An all-weather access road, designed to safely accommodate the anticipated volume of vehicular traffic, would be provided from existing arteries to the site. An access road usually has two lanes of sufficient width and strength to carry the expected delivery vehicle load (Figure 21). Access road grades would be a

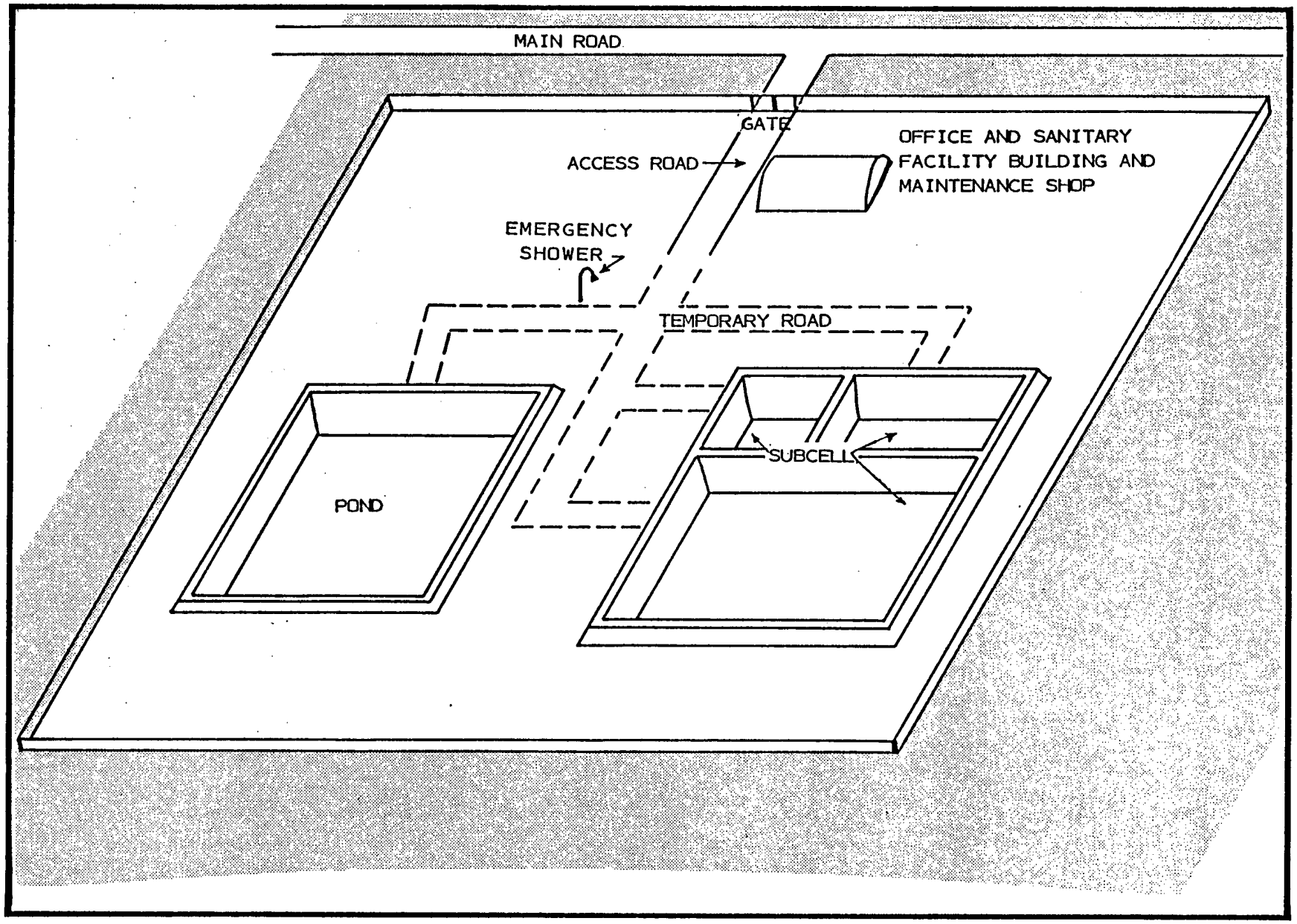

Figure 20. Artist concept of on-site landfill and pond.

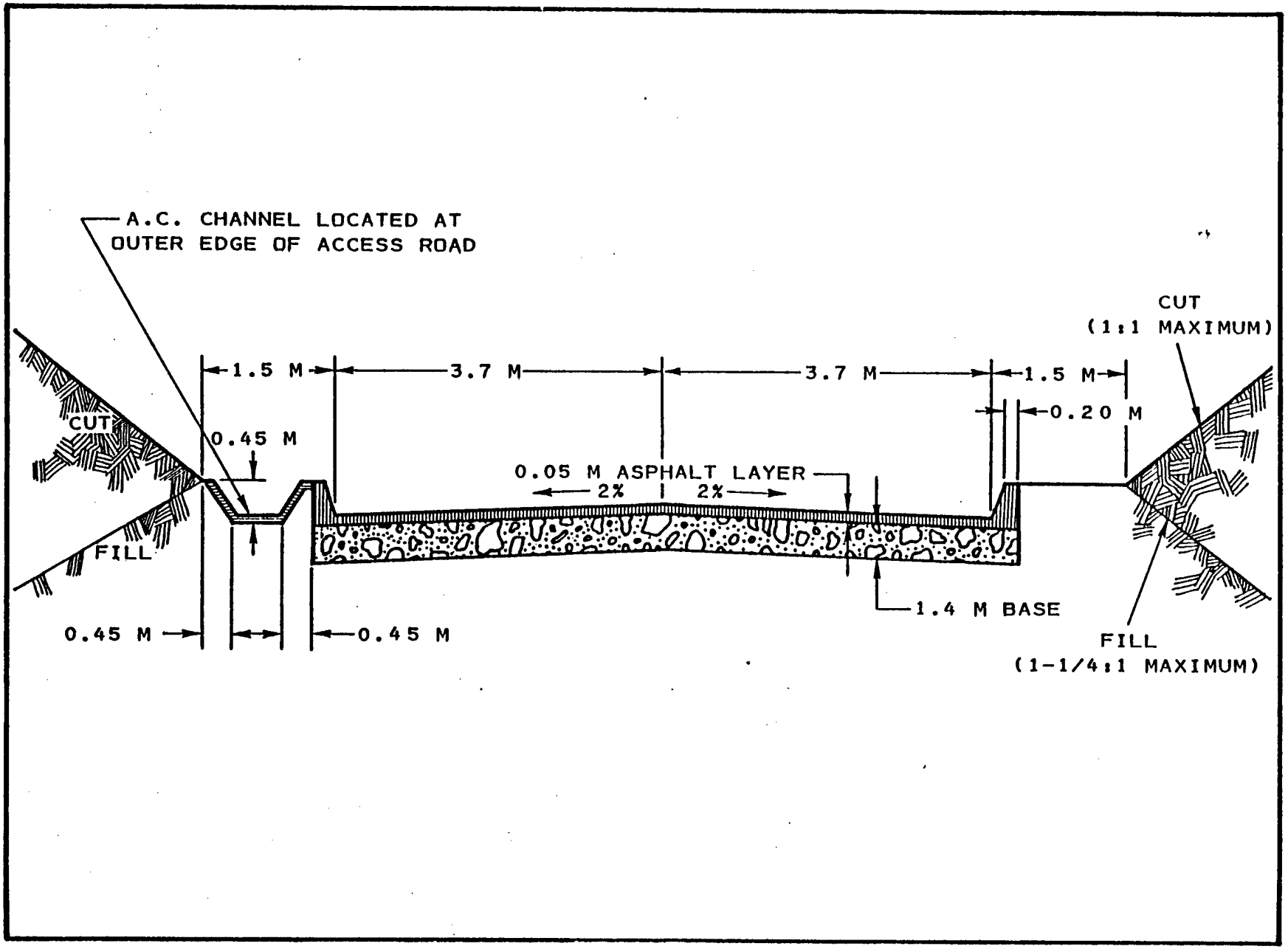

Figure 21. Landfill access road.

maximum of 6 to 8 percent. Their intersection with the existing road would be designed to reflect traffic volumes and safety requirements.

The on-site access road would be approximately 1.6 km (1 mi) long, terminating at the delivery control facility. Temporary unpaved roads would be utilized for transporting wastes from this point to the unloading area. These roads would be constructed of on-site soil with a topping of suitable material (e.g., gravel, crushed aggregate, cinders, broken concrete, or demolition wastes). Lime, portland cement, or asphalt may be used as binders to maintain road stability and to control dust. Asphalt is to be used for this example site.

(c) Buildings

A shelter to maintain and house equipment used at the site would be provided; part of this structure could serve as an office. Appropriate sanitary facilities, a first-aid station, and emergency shower facilities would be provided for site employees.

Hypothetical building floor space requirements for the example site are as follows:

- Office - 54 m^2 (600 ft^2).
- Equipment storage/maintenance - 140 m^2 (1,560 ft^2).

(d) Utilities

A landfill site should be provided with power, water, and telephone. Power, required for maintenance of on-site operating equipment and for lighting, would be provided either by an electric generator or by extending power lines on the site. For this example site, it is assumed that an electric generator (7.5 kW) would be installed.

Water in sufficient quantities and with adequate pressure is needed in the event of fire, for equipment maintenance, and for dust control. Potable water should be made available for site personnel. A 38,000-l (10,000-gal) elevated storage tank would be provided at the site. Water to fill the tank must be periodically hauled to the site and pumped into the tanks.

A two-way radio would also be provided for communications, in lieu of installing telephone lines to the site. Communications are particularly important at a Class I landfill to call in emergency services in the event of an accident or fire.

(e) Fencing

To prevent trespassing by unauthorized persons, a 1.8-m (6-ft) chain link fence, topped with three strands of barbed wire projecting at a 45-degree angle, would be installed around the

3-ha (7.5-ac) site periphery. An 8-m (26-ft) gate would be provided at the entrance, and is to be closed and locked when the site is unattended or otherwise closed to users. Signs would be posted to warn that hazardous chemicals are present and that unauthorized entry is prohibited.

(f) Drainage Facilities

Drainage facilities would be required to divert all off-site surface water runoff around the site. Drainage structures would also be needed to rapidly divert on-site runoff away from disposal operations. Drainage structure requirements depend on off-site and on-site topographic characteristics, site size, and other factors.

Drainage structures are typically constructed on half-round corrugated metal pipe (CMP) channels, earth berms and channels, and asphalt concrete (AC) lined channels. The terrain of the example site and the surrounding area suggests that a 76-cm (30-in) half-round CMP channel around the periphery of the site would be adequate to divert off-site surface drainage. Earth berms and channels would be used to control on-site surface waters.

(g) Equipment

The following equipment would be used at the example disposal site:

- One forklift.
- One front-end loader.
- One track dozer.
- One water truck.
- One pickup truck.

A scraper would be required if cover soil must be hauled long distances (over 100 m or 330 ft), or when one dozer alone cannot efficiently excavate trenches and spread cover soil. It is assumed that conditions at the example site do not warrant a scraper.

(5) Landfill Construction

Construction of a Class I landfill would typically involve the following steps: cell excavation, installation of a membrane or admix liner and internal leachate collection system, and placement of drainage facilities and ground water monitoring wells.

(a) Cell Excavation

Excavation at the hypothetical site must be such that the disposal cell floors are greater than 15.3 m (50 ft) from maximum

ground water elevations, as stipulated by EPA regulations. As noted, it has been assumed that the site meets the ideal conditions.

For illustrative purposes, it is further assumed that maximum ground water elevation is 18.3 m (60 ft) below surface grades at the hypothetical site. Thus, cell excavation of 3 m (10 ft) below grade would be acceptable. Figure 22 depicts the disposal cell construction.

Disposal cell plan dimensions would be 90 m by 90 m (300 ft by 300 ft) with side slopes at 2:1 horizontal to vertical. A 60-cm (2 ft) perimeter berm would also be constructed to divert surface runoff away from the disposal area to adjacent collection ditches.

Later in the site construction process (after the liner is installed), clay berms 1 m (3 ft) thick would be built to divide the cell into three subcells. The surface areas of subcell Nos. 1, 2, and 3 are to be 90 m by 85 m (297 ft by 280.5 ft), 86 m by 5 m (283.8 ft by 16.5 ft), and 5 m by 4 m (16.5 ft by 13.2 ft), respectively.

Deeper excavations would be possible if ground water were appreciably lower or absent, or if it were under strong piezometric pressure. On the other hand, additional cell capacity could be provided above grade by constructing berms of compacted soil around the excavation.

(b) Liner Design and Installation

It is assumed that most soils at the site meet the permeability requirement of 10^{-7} cm per sec. However, some deposits of more permeable soils were found. To further ensure ground water protection, a 30-mil hypalon membrane liner would be placed so that it completely covers the bottom and side walls of the cell. It is to be anchored by burying it in a trench 12 in wide by 12 in deep, excavated at the cell's perimeter (Figure 23). The liner integrity would be protected from mechanical damage by a 60-cm (2-ft) thick compact clay soil layer.

(c) Leachate Collection System

Although evaporation exceeds precipitation in the VAFB area, heavy rains usually occur in the winter season, and leachate may be generated at this site. Thus, a system to collect leachate that accumulates above the liner would be provided. The system is to be composed of three 15-cm (6-in), perforated, vitrified clay pipes situated along the low end of the subcell within the landfill. The pipe lengths are to be 40 m (132 ft), 40 m (132 ft), and 3 m (9.9 ft) for subcell Nos. 1, 2, and 3, respectively. The cell bottom would be graded at a 1 to 2 percent slope toward the collection line. Access to the collection line would be provided by three pairs of two 7-m (82-ft) leachate standpipes in-

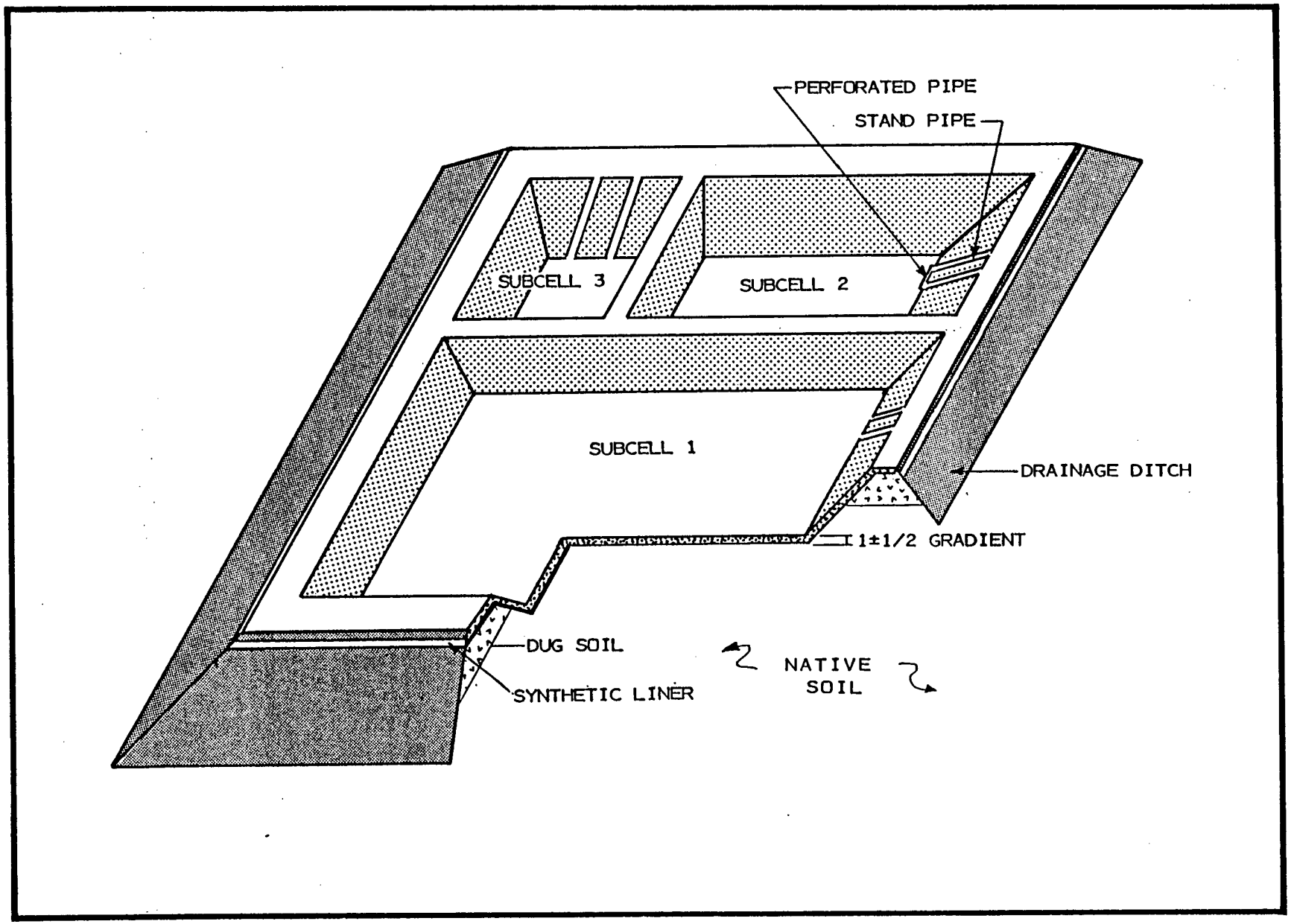

Figure 22. Landfill construction.

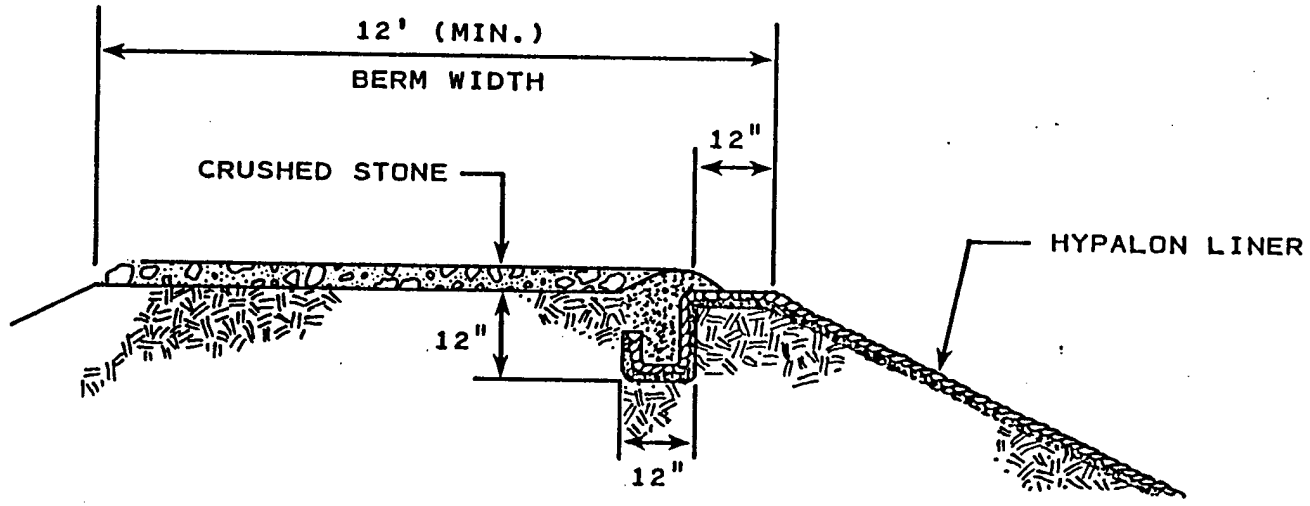

Figure 23. Liner anchorage.

stalled against the side wall of the fill. This sloped standpipe design would facilitate movement of fill machinery, and minimize the possibility of mechanical damage to the pipes.

In addition, a leakage detection and removal system would be placed beneath the hypalon liner for collection of any leachate that leaks through the membrane liner (Figure 24). Leakage from subcell Nos. 1, 2, and 3 would be collected separately. The system construction is similar to that described above.

Leachate could subsequently be landfilled if it is first mixed with an adsorbent material, or chemically fixed or solidified. Other alternatives for managing leachate include treatment to render it nonhazardous (by methods described for treatment of analogous waste streams in Section III of this report), incineration, or surface impoundment.

(d) Ground Water Monitoring

A ground water monitoring program is a necessary part of any Class I disposal site design. To select ground water monitoring points, the designer must evaluate the following:

- Current and projected use of water resources of the area.
- Direction of ground water movement and any fluctuations that may occur throughout the year.
- Interrelationship of the underlying aquifer with other aquifers and surface waters.

For the hypothetical site, four sampling wells would be installed near the fill itself. One well would be upstream of the site, one at midsite, and two downstream from the site. Wells bored during the geophysical investigations would already have established ground water flow direction.

Each sampling well would be cased, and the annular space between the monitored zone (zone of saturation) and the surface would be backfilled with portland cement to effectively prevent percolation of surface water into the well bore. The well opening at the surface would have a lockable, removable cap to control access and to prevent entrance of extraneous water.

(e) Waste Disposal Procedure

After treatment according to pertinent RCRA regulations, all liquid waste would be drummed and deposited intact in the subcells. Wastes of Category Nos. 5 and 8 are to be segregated from other waste categories, as well as from each other due to their incompatibility. Subcell No. 3 (the smallest subcell) is designated for waste Category No. 8, and subcell No. 2 (medium size) is for waste Category No. 5.

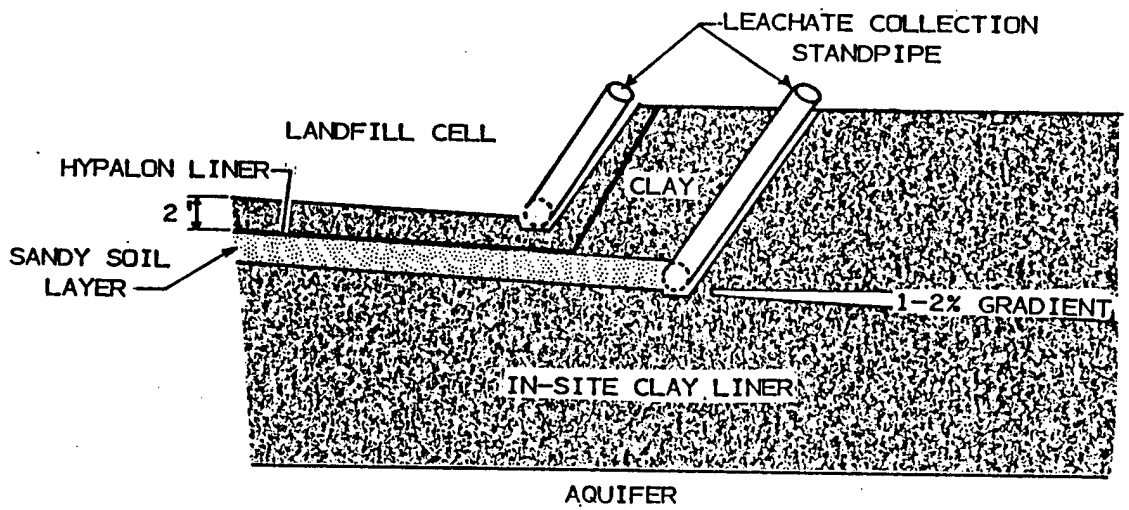

Figure 24. Double leachate collection system.

The containerized liquid wastes would be trucked to the landfill, unloaded from the hauling truck by forklift, deposited in the disposal cell, and stacked by a front-end loader, as required. Subcell No. 3 is too small to accommodate a front-end loader. Therefore, the drummed waste should be carefully rolled down to avoid breakage of the segregation berms and/or drums. A small crane, if available, would facilitate waste placement. Such a small operation, however, does not merit the purchase of a new piece of equipment.

Uncontainerized solid wastes are also to be hauled to the site by truck. They would then be dumped directly to the fill, and the deposited wastes covered with native soil to minimize infiltration of rainfall. Wastes are to be covered daily in the wet season, and several times per week during other times of the year.

(6) Estimated Cost for On-Site Landfill Development

The conceptual design provides a basis for estimating capital and O&M costs for implementing a new on-site landfill.

Table 30 summarizes the capital costs associated with development of a Class I landfill. Major capital cost elements are site preparation and construction, and liner installation.

O&M costs for the example site are estimated to be $39,060 for FY 1985, as shown in Table 31. O&M costs include those costs associated with disposal of incoming waste and other actions required to maintain a clean, environmentally safe, aesthetically pleasing, and efficient operation. The principal operating cost elements are personnel, equipment operating expenses (e.g., gas and oil, and repair), cover soil excavation and haul costs, and general site maintenance (e.g., repair of drainage facilities). Costs for supervision and administration would be covered under the costs for overall waste management (see Section V). Costs to monitor ground water wells are also included.

Note that the unit costs for operating a relatively small site are significantly greater than for larger sites. Such economies of scale are common for land disposal facilities. Basic equipment items and personnel must be assigned to any size site, but utilization is not as efficient at smaller sites.

g. Conceptual Design of On-Site Surface Impoundment

Waste streams suitable for surface impoundments possess the following characteristics:

- They are chemically compatible.
- Contaminants in the waste streams are either present at low concentration (dilution factor is high), or biodegradable.

TABLE 30

CAPITAL COST ESTIMATES FOR THE EXAMPLE LANDFILL†

Item	Unit Cost	Quantity	Cost* Year 1980	Cost* Year 1985
Clearing and Grubbing/ha	$2,000	2.8	$5,600	$8,680
Access Roads/m				
A. Permanent	65.50	1,615	105,800	167,160
B. Temporary	19.60	400	7,840	12,390
Drainage Structures				
A. 30-in 1/2 round CMP/m	75	400	30,000	47,400
B. Earth walls/m	2.20	360	790	1,250
Fencing/m	50	700	35,000	55,300
Buildings/m^2				
A. Office	444	54	24,000	37,920
B. Maintenance/storage	289	140	40,000	63,200
Utilities				
A. Electric Generator	4,000	1	4,000	6,680
B. Communications Equipment	500	1	500	840
C. Water Tank (10,000 gal)	10,000	1	10,000	16,700
Initial Cell Excavation/m^3	3.50	24,000	84,000	132,720
Hypalon Liner with Clay Layer/m^2	22.50	5,400	121,000	191,180
Leachate Collection System	20	208	4,160	6,570
Ground Water Monitoring	600	4	2,400	3,790
Totals			$475,090	$751,780

* Where applicable, costs include all factors such as installation, engineering, contractor's profit and contingencies, etc.

† Costs for planning, design, and equipment are not included.

TABLE 31

O & M COST ESTIMATE FOR THE EXAMPLE LANDFILL

Item	Unit Cost	Quantity	Cost										
			1980	1985	1986	1987	1988	1989	1990	1991	1992	1993	1994
Equipment Operator	20,000	60%	12,000	18,600	20,160	21,600	23,160	24,720	26,160	27,600	29,160	30,720	32,160
Equipment Operator and Maintenance/yr	9,000	60%	5,400	8,370	9,072	9,720	10,422	11,124	11,772	12,420	13,122	13,824	14,472
Administrative/yr	4,000	60%	2,400	3,720	4,032	4,320	4,632	4,944	5,232	5,520	5,832	6,144	6,432
Monitoring/yr	5,400	1	5,400	8,370	9,072	9,720	10,422	11,124	11,772	12,420	13,122	13,824	14,472
Total			25,200	39,060	42,336	45,360	48,636	51,912	54,936	57,960	61,236	64,512	67,536

(1) Basis for Design

The basic management objective for an on-site surface impoundment includes:

- Complete containment of the disposed wastes.
- Utilization of the oxidation/biodegradation process to break down organic contaminants.
- Reduction of large waste volumes by evaporation.

Pertinent site selection and design criteria applicable to surface and ground water protection are assumed to be the same as those used for the Class I landfill.

For the purpose of this conceptual example, the following assumptions are made:

- A specific site has been selected, and the ideal site selection criteria can be satisfied.
- On-site soils have a high clay content.

(2) Site Area and Volume Requirements

An estimated 129,045 m^3 (4.5 million ft^3) of waste category Nos. 2b, 9, 10, and 15, would be impounded during the project. It is, however, expected that major contaminants in these waste streams are biodegradable, and about 1 month of retention time would be sufficient for degradation. Thus, the conceptual design would require a surface impoundment large enough to contain wastes generated from 15 launches (i.e., maximum annual waste generation of the 10-year project). Specifically, a pond volume of 15,500 m^3 (546,000 ft^3) would be adequate.

Supernatant water would be pumped out after approximately 3 months of retention time to accommodate the next disposal. Testing of supernatant water would be required to insure that discharge to the surrounding soils is safe. The discharge is to be used to irrigate the surrounding soil. To facilitate the oxidation process, the pond should not be too deep. For this hypothetical example, a depth of 2.4 m (8 ft) is assumed. The top 0.6 m (2 ft) would serve as freeboard, and thickness of the wastewater body in the impoundment would be 1.8 m (6 ft). Approximately 1.0 ha (25 ac) of site surface area are required for disposal purposes.

The efficiency of waste disposal operations and land use would increase if the surface impoundment were constructed close to the landfill, thereby eliminating the need for additional storage buildings or permanent access roads. Since both the landfill and pond are expected to be small in size, this approach

is easily achieved. Therefore, it is assumed that the following facilities would serve both surface impoundment and landfill sites:

- Permanent access road.
- Office/storage buildings.
- Upgradient ground water monitoring well.
- Some equipment, such as a water truck.
- A portion of the fence.

In addition, the geophysical investigation required for the engineering plans could be utilized for both sites.

Major conceptual design features for an on-site surface impoundment, which are also applicable for a Class I landfill, would include:

- Engineering plan development (i.e., geophysical investigation drawings, written specifications, etc.).

- Site preparation (i.e., clearing and grubbing, access roads, buildings), utilities, fencing.

- Site construction (i.e., drainage facilities, pond excavation, liner installation, ground water monitoring well installation).

Design features unique to the example surface impoundment would include:

- Equipment - A tank truck and accessories for hauling and discharging wastes to the pond would be required.

- Pond construction - Subcell division is not necessary and would not be done.

- Leachate detection and collection system - This system would be built between the in situ clay liner and the synthetic membrane. The system would consist of a 15-cm (6-in) diameter, perforated, vitrified clay pipe 30 m (104 ft) long, placed horizontally at the low end of the pit bottom and connected to the surface via two 5-cm (2-in) diameter PVC pipes. Two 7-m (23-ft) pipes would be provided as a safety factor in the event that one of the pipes fails or clogs. Any leachate would be extracted from the collection pipe with a 3-hp vacuum pump. Collected leachate could then be returned to the pond, or treated to render it nonhazardous.

(3) Estimated Cost for On-Site Pond Development

Table 32 summarizes the capital costs associated with developing a surface impoundment for disposal of the four waste streams generated by the space shuttle project. Major capital

TABLE 32

CAPITAL COST ESTIMATES FOR THE EXAMPLE IMPOUNDMENT*

Item†	Unit Cost	Quantity	Cost($) Year 1980#	Cost($) Year 1985#
Clearing and Grubbing/ha	2,000	2	4,000	6,200
Access road, temporary/m	19.60	200	3,920	6,190
Drainage structures				
A. 30-1/2 round CMP/m	75	395	29,630	46,810
B. Earth walls/m	2.20	395	870	1,370
Fencing/m	50	600	30,000	47,400
Initial cell excavation/m^3	3.90	15,500	60,500	101,040
Hypalon liner with clay layer/m^2	22.50	10,000	225,000	355,500
Leachate collection system/m	20	54	1,080	1,710
Groundwater monitoring	600	2	1,200	1,900
Total			$356,200	$568,120

* Planning and design, and equipment costs are not included.

† Items that are applicable for both sites are not included in this table.

\# Where applicable, costs include all factors such as installation, engineering, contractor's profit and contingencies, etc.

cost elements are site preparation and construction, and liner installation.

Estimated O&M costs of the hypothetical pond are relatively lower than those for the example landfill, since no soil cover would be required (see Table 33). In fact, the same personnel are expected to handle both types of disposal operations.

3. OFF-SITE LAND DISPOSAL OF HAZARDOUS WASTES

There are five hazardous waste disposal sites currently permitted and operating in California. VAFB is in close proximity to three of these sites: Casmalia, located in Santa Barbara County; Kettleman Hills, located in Kings County; and West Covina, located in Los Angeles County. With the exception of the Kettleman facility, wastes from Port Hueneme could also be disposed of at these same sites. A list of all permitted California hazardous waste disposal sites, in addition to two permitted sites in western Nevada, is given in Table 34. A map showing the locations of all five facilities is provided in Figure 25.

This subsection contains information on costs for disposal for the three facilities which are the most likely candidates for use by either VAFB or Port Hueneme. Other sites are not discussed, since long hauling distances and concomitant high transport fees restrict their regular use. The information was obtained through telephone interviews and correspondence with county and state agencies, and knowledgeable representatives of firms operating hazardous waste management facilities.

The costs for disposing of STS wastes at the West Covina, Casmalia, and Kettleman Hills sites were estimated for each year of the STS project, for the total project (1985 through 1994), and on a per launch basis. Separate estimates were developed for VAFB and Port Hueneme. Costs were based on four disposal options shown in Table 35.

These options were selected to show to what extent certain types of hazardous waste management decisions affect disposal costs. Additional off-site disposal options are presented in Section VI, correlating with overall waste management schemes proposed by SCS for VAFB and Port Hueneme.

A summary of operations, conditions, and disposal fees at Casmalia, Kettleman, and West Covina is presented in Table 36. Fees quoted in the table were effective in November 1980. Quotations for Casmalia and Kettleman are good representations of the fees actually charged. Quotations for West Covina can be expected to vary widely from posted fees depending, among other things, on the kind of waste shipped and the transport company used. (There is a discount for using the BKK-owned hauler, Chancellor & Ogden.)

TABLE 33

O & M COST ESTIMATES FOR THE EXAMPLE SURFACE IMPOUNDMENT

Item	Unit Cost	Quantity	Cost										
			1980	1985	1986	1987	1988	1989	1990	1991	1992	1993	1994
Personnel (including fringes)													
Equipment Operator	20,000	40%	8,000	12,400	13,440	14,400	15,440	16,480	17,440	18,400	19,440	20,480	21,440
Equipment Operation and Maintenance/yr	9,000	40%	3,600	5,580	6,048	6,480	6,948	7,416	7,848	8,280	8,748	9,216	9,648
Administrative per yr	4,000	40%	1,600	2,480	2,688	2,880	3,088	3,296	3,488	3,680	3,888	4,096	4,288
Monitoring per yr†	3,600	1	3,600	5,580	6,048	6,480	6,948	7,416	7,848	8,280	8,748	9,216	9,648
Total			16,800	20,460	28,224	30,240	32,424	34,608	36,624	38,640	40,824	43,008	45,024

† Background ground water monitoring is not included.

TABLE 34

HAZARDOUS WASTE DISPOSAL SITES IN CALIFORNIA AND NEVADA

Casmalia Disposal Company
Casmalia, California
Santa Barbara County
Contact: John McBride
(805) 969-4703

Chemical Waste Management Company
Kettleman City, California
Kings County
Contact: Len Tinnan
(213) 435-6381

BKK, Inc.
West Covina, California
Los Angeles County
Contact: Joe Johnson
(213) 539-7150

IT Corporation
Martinez, California
Contra Costa County
Contact: Dan Cashier
(213) 830-1781

IT Corporation
Benecia California
Solano County
Contact: Dan Cashier
(213) 830-1781

Nuclear Engineering Co., Inc. (NECO)
Beatty Nevada
Contact: Steve Carpenter
(702) 553-2203

BKK, Inc.
Beatty County, Nevada
Contact: Joe Johnson
(213) 539-7150

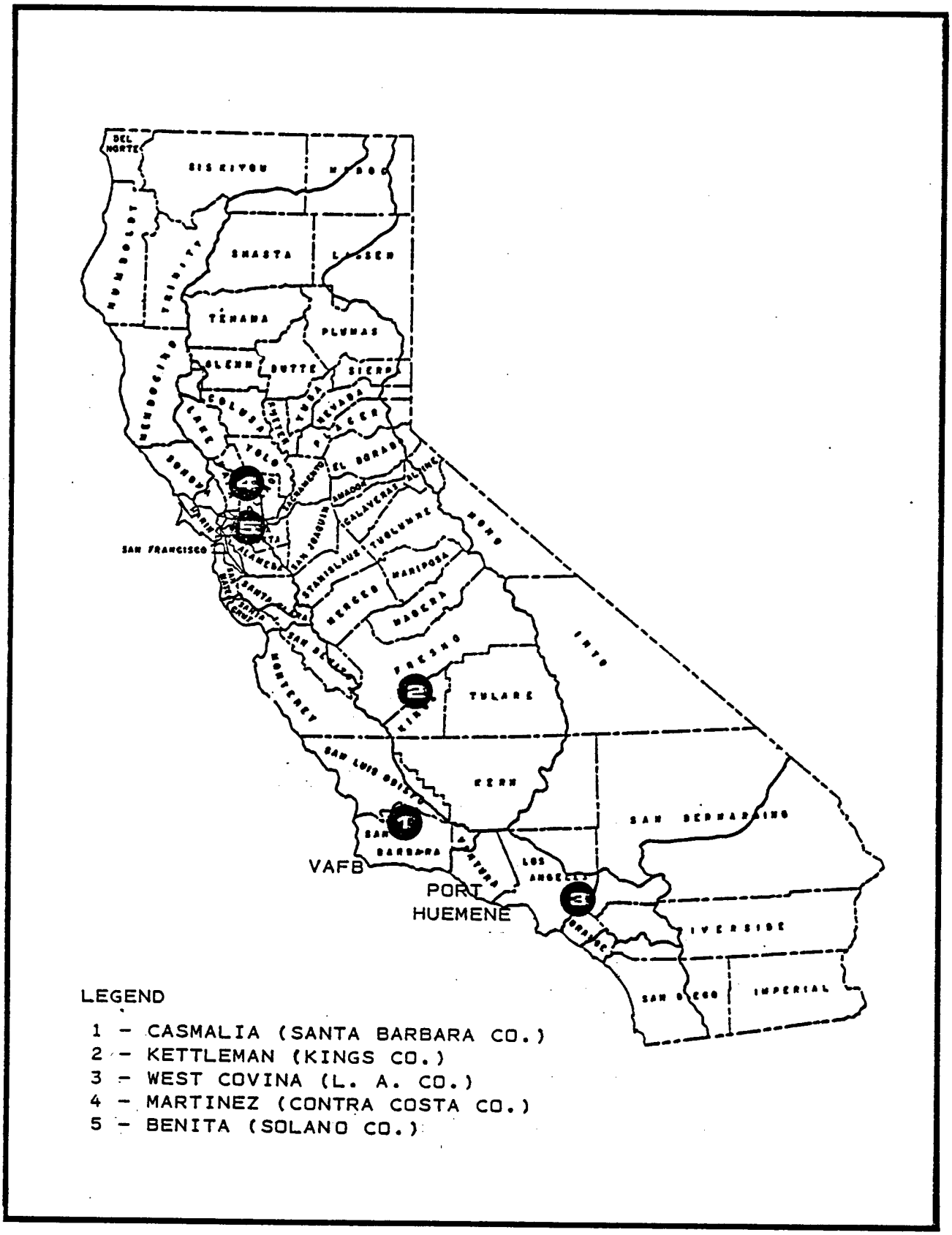

Figure 25. Location of hazardous waste disposal sites.

TABLE 35

WASTE MANAGEMENT OPTIONS FOR OFF-SITE DISPOSAL

Option	VAFB	Port Hueneme
A	Most extreme case - all wastes disposed of off base; no preconditioning of wastes.	Most extreme case - all wastes disposed of off base; no preconditioning of wastes.
B	Preconditioning of some wastes: 1) QW (Category 10 is neutralized). 2) N_2O_4 (Category 10) is oxidized with H_2O_2. 3) Category 13 solids are compacted to 80 percent of original volume. 4) Category 14 solids are compacted to 1/3 of original volume.	Preconditioning of some wastes: 1) Category 13 solids are compacted to 80 percent of original volume. 2) Category 14 solids are compacted to 1/3 of original volume.
C	Same as Option A, except QW (Category 10) is not disposed of at an off-base land disposal facility. QW is treated on base, and discharged to base evaporation pond.	Same as Option A, except IW (Category 15) and SRB (Category 9) wastes are not disposed of at an off-base land disposal facility. IW and SRB wastes are treated on base, and discharged to base facility or POTW.
D	Same as Option B, except QW is not disposed of at an off-base land disposal facility.	Same as Option B except IW and SRB wastes are not disposed of at an off-base land disposal facility.

TABLE 36. DESCRIPTION OF CLASS I DISPOSAL FACILITIES AT CASMALIA, KETTLEMAN, AND WEST COVINA

Disposal Site	Location	Distance From VAFB	Nearest City	Permit Type	Total Disposal Area	Class I Area	Disposal Practices	Net Evaporation Rate	Site Capacity	Current Intake	Geology/Hydrogeology	Comments
Casmalia	50 mi NNW of Santa Barbara, CA. Adjacent to Casmalia	Approx 3 mi from VAFB boundary	Casmalia	Class I	4,300 acres	250 acres	Ponding, landforming, burial of containerized waste	36 in/yr	Not determined (Site has never begun to approach capacity)	26 million gal/yr of bulk liquid wastes. 4,000 drums/mo	Underlain by 750 to 1,500 ft of Sisquoc Fm., then 2,000 ft of Monterey Fm. groundwater; apparently none beneath site	Plans are to install on-site facilities to treat liquid, ignitable, and reactive wastes to conform with RCRA regulations. Casmalia is investigating alternative treatment technologies to compare efficiencies, as well as compatibility with the legal interpretation of RCRA
Kettleman	4 mi N of Kettleman City, 3/4 mi N of State Route 41	120 mi	Kettleman City	Class I	1,120 acres	210 acres	Ponding, landforming, burial of containerized waste	96 in/yr	313,000 cu yd³ void space for container waste (i.e., 626,000 drums) 26.8 million gal/yr evaporated from ponds 52.3 million gal/yr evaporated from landfarming	20,000 ton/mo of waste, including 10,000 drums/mo	Underlain by Pliocene sediments with low vertical permeability Groundwater: none above a depth of 5,000 ft; below 5,000 ft very poor quality	Are preparing to treat ignitable, acidic, and basic wastes on site to conform with RCRA regulations; also have capabilities for handling liquid wastes in accordance with RCRA
W. Covina	3-1/2 mi S of I-10 in W. Covina, just E of Azusa Avenue in San Jose Hills	190 mi	W. Covina, Walnut, La Puente	Class I & II	583 acres	Estimate 140 acres	Comingling, injection, burial of containerized waste	--	Design capacity of 200 million gal for injection, and 41,000 acre-feet for comingling	Not available	Underlain by late Miocene Puene Fm., shales and siltstones Groundwater: some present; depth and quality unknown	Have no specific plans for treating ignitable wastes to conform with RCRA, but will be able to render some wastes nonignitable by landfarming; presently, can meet RCRA requirements for treatment of liquid waste and most reactive wastes

Note: Casmalia - Public sentiment against the site is strong, primarily due to volume of waste intake and concern over the impact of toxic waste disposal on local agriculture.
Kettleman - Potential exists to triple void space currently available for containerized waste. No hauling services are available.
W. Covina - Site waste intake may increase sharply in the near future due to the closure of other Class I sites in southern California. Public sentiment against the site is strong. The local communities are pushing for its closure.

TABLE 37

UNIT COSTS FOR OFF-SITE LAND DISPOSAL OF HAZARDOUS WASTES GENERATED BY THE STS PROGRAM, 1980 DOLLARS

Waste Category	Waste Category	Waste Type	Shipping Mode	Unit Cost, $ (units)*			
				Casmalia	Kettleman	West Covina Bulk	West Covina Drum
1	Freon (concentrated)	C	d	50(T)	15(d)	20(T)	30(d)
2	Hypergols (10 to 100%)	D	d	120(T)†	20(d)	30(T)	55(d)
3	Petrochemicals (odorous;flammable)	B	d	25(T)	0.12(G)	20(T)	30(d)
3	Heptane (listed waste)	C	d	50(T)	15(d)	20(T)	30(d)
4	Bilge Water (oily)	A	d	8.50(T)	0.054(G)	19(T)	30(d)
5	Hydrocarbons (listed waste)	C	d	50(T)	15(d)	20(T)	30(d)
8	Acids/Bases (15%, aqueous)	B	d	48.50(T)	0.12(G)	20(T)	30(d)
8	Alodine Wastewater (28,000 ppm)	D	d	120(T)	20(d)	30(T)	55(d)
9	SRB Rinse Water (oily)	A	b	8.50(T)	0.054(G)	19(T)	30(d)
10	Quench Water (<5% HCl)	B	b	12.50(T)	0.054(G)	30(T)	30(d)
10	Neutralized QW (1,500 ppm salinity)	A	b	8.50(T)	0.054(G)	19(T)	30(d)
10	Oxidizer (untreated)	D	d	120(T)†	20(d)	30(T)	55(d)
10	Oxidizer (decomposed, 5 - 10% HNO_3)#	B	d	30.50(T)	0.12(G)	30(T)	55(d)
10	Ammonia Wastewater (<5%)	B	d	12.50(T)	0.054(G)	20(T)	30(d)
11	Hydrazine Citrate (15%, aqueous)	D	d	120(T)†	20(d)	30(T)	55(d)
13	Combustible Solids	C	d,b	50(CY)	15(d)	20(T)	30(d)
14	Non-Combustible Solids	C	d,b	50(CY)	15(d)	20(T)	30(d)
15	Miscellaneous Wastewater (EEWS, <1%)	A	d,b	8.50(T)	0.054(G)	19(T)	30(d)
15	Misc. Wastewater (EEWS, IW, 1,000 ppm)	A	d,b	8.50(T)	0.054(G)	30(T)	30(d)
15	Misc. Wastewater (IW only, 1,000 ppm)	A	d,b	8.50(T)	0.054(G)	20(T)	30(d)

* Based on fees posted November 1980.
† If accepted for disposal.
# After pretreatment at VAFB using peroxide.
Note: Waste Type A - Low risk: such as brines, oil, drilling muds.
Waste Type B - Medium risk: acids alkalis, and odorous or hard to handle wastes.
Waste Type C - High risk: EPA/California "listed" hazardous waste.
Waste Type D - High risk: EPA/California acutely or extremely hazardous wastes.
Waste Type E - PCB-containing waste.
d = Drums most likely method for containers and shipping waste.
b = Bulk shipment of waste is anticipated.
T = Tons; CY = cubic yards
G = Gallons

Based on fees listed in Table 37, 1980 unit disposal costs were developed for each STS waste category. Prior to the selection of a unit cost, a waste type (see Table 37) was determined for each waste category, defining its level of hazard. For example, Waste Category 1 (freon) is a Type C high-risk waste, since it appears on EPA's hazardous waste list. Waste Types A through E are explained in Table 37, and are consistent with the pricing criteria used at most disposal sites. A second factor considered was whether wastes from each category would be shipped in bulk lots or in drums. (It is assumed that large-volume, low-risk wastewater will be bulk-shipped, while small-volume and high-risk wastes will require drumming.) Unit costs were then assigned to each waste category based on waste type, concentration, and containerization. Thus, from the table, Waste Category 1 (freon) costs $50 per ton at Casmalia, $15 per ton at Kettleman, and $20 per ton (bulk) or $30 per drum at West Covina. Unit costs multiplied by the quantity of waste generated yields the total off-site disposal cost (excluding transportation). Table 38 provides a summary of waste quantities and 1980 disposal costs for each waste category. Total costs for all categories of waste disposed of at off-base facilities can easily be summed from values presented in this table. Note, however, that Table 38 gives the cost of 1985 waste disposal in 1980 dollars. A sample calculation for escalating costs to 1985 dollars, as well as equations for estimating costs for subsequent years, is presented in Table 39.

Total costs for disposing of all 1985 wastes (1980 dollars) are shown in Table 40 for each disposal option. These costs were then escalated using the methodology shown in the sample calculation to reflect costs for each year of the STS project. Tables 41 and 42 show the 1985 through 1994 projected costs of disposal for VAFB and Port Hueneme wastes, respectively. Included in the tables are total disposal costs for the STS project and average costs on a per launch basis. Total project costs under Option A for VAFB and Port Hueneme for disposing of all wastes off site are $8,076,100 for Casmalia, $9,291,100 for Kettleman, and $19,293,900 (drummed waste costs) for West Covina. Costs for disposing of bulk wastes at West Covina cannot be applied to all STS wastes, since low-volume or high-risk wastes are generally drummed. These costs were developed mainly to illustrate the high cost for disposing of equivalent volumes of drummed waste.

By comparison to Option A costs, application of a very minimal management plan (Option B) reduces total project costs to $6,386,900 for Casmalia (21 percent cost reduction), $8,619,600 (7 percent cost reduction) at Kettleman, and $15,110,300 (22 percent cost reduction) at West Covina.

Options C and D illustrate even more vividly the impact of management decisions on costs. Under Option C, total project costs are $3,006,500 for Casmalia (63 percent less than Option A), $3,129,800 for Kettleman (66 percent less than Option A), and $7,364,400 for West Covina (62 percent less than Option A).

TABLE 38

SUMMARY OF COSTS FOR OFF-SITE LAND DISPOSAL OF STS HAZARDOUS WASTES, 1980 DOLLARS

Category	Quantity (1985 Baseline)		Cost, 1980 Dollars			
					West Covina	
	Gallons	Tons	Casmalia	Kettleman	Bulk	Drum*
Vandenberg						
1 Freon	1,598	10.5	525	435	210	870
2 Hypergols	5,512	22.0	2,640†	2,000	660	5,500
3 Petrochemicals	456	1.12	28	55	22	240
3 Heptane	120	0.33	17	30	7	60
5 Hydrocarbons	4,580	26	1,300	1,245	520	2,490
8 Alodine Wastewater	160	0.67	80	60	20	165
10 Quench Water	600,000	2,503	31,288	32,400	75,090	-
10 Quench Water#	600,000	2,503	21,276	32,400	47,557	-
10 Oxidizer**	1,676	7.36	224	201	221	1,650
10 Oxidizer††	1,676	7.36	883†	620	221	1,705
10 NH_3 (aqueous)	40	0.16	2	2	3	55
11 Hydrazine Citrate	4,040	16.3	1,956†	1,460	489	4,015
13 Combustible Solids##	317.6(CY)	12.3	15,880	-	246	-
	1,174(d)	-	-	17,610	-	35,220
13 Combustible Solids***	254.1(CY)	12.3	12,705	-	246	-
	939(d)	-	-	14,085	-	28,170
14 Noncombustible Solids##	52.2(CY)	2.50	2,610	-	50	-
	193(d)	-	-	2,895	-	5,790
14 Noncombustible Solids***	17.4(CY)	2.50	870	-	50	-
	64(d)	-	-	960	-	1,920
15 Miscellaneous Wastewater	15,296	63.6	541	826	1,208	8,340
Port Hueneme						
1 Freon	1.6	0.003	Neg.	Neg.	Neg.	Neg.
2 Hypergols	164	0.68	81.6	60	20	165
5 Hydrocarbons	8	0.04	2	Neg.	Neg.	Neg.

TABLE 38 (continued)

Category	Quantity (1985 Baseline) Gallons	Tons	Cost, 1980 Dollars Casmalia	Kettleman	West Covina Bulk	Drum*
8 Acids/Bases	60	0.12	6	7	2	30
9 SRB Rinse Water	273,360	1,093	9,291	14,761	20,767	-
11 Hydrazine Citrate	200	0.80	96†	80	24	220
13 Combustible Solids†	60.7(CY)	3.2	3,035	-	64	-
	225(d)	-	-	3,375	-	6,750
13 Combustible Solids***	48.6(CY)	3.2	2,430	-	64	-
	180(d)	-	-	2,700	-	5,400
14 Noncombustible Solids##	0.49(CY)	0.29	25	-	6	-
	2(d)	-	-	30	-	60
14 Noncombustible Solids***	0.16(CY)	0.29	8	-	6	-
	1(d)	-	-	15	-	30
15 Miscellaneous Wastewater	196,480	820	6,970	10,610	16,400	-
15 Miscellaneous Wastewater†††	640	2.67	23	35	53	360

* High-volume wastes such as quench water, insulation wastewater, and SRB rinse water are too costly to drum, and are assumed to be bulk-shipped in all cases. All other wastes are drummed. Disposal costs are calculated using this assumption. All drum costs are based on a 55-gal drum.

† If accepted.

Neutralized prior to shipment; final volume dependent on form of base used.

** Oxidized to HNO_3.

†† Not pretreated.

Uncrushed solids. Categories 13 and 14 volumes can be reduced by 20% and 66%, respectively, if compacted.

*** Compacted solids.

††† Excludes insulation wastewater.

Note: CY = cubic yard.
d = drums.

TABLE 39

SAMPLE CALCULATION FOR DETERMINING COSTS FOR OFF-SITE LAND DISPOSAL

Conditions

Option B
Disposal at Kettleman site
Vandenberg wastes

Procedure

1) Using Table 37, select wastes requiring disposal under Option B.
2) From the same table, select costs for disposal at Kettleman.
3) Sum the costs to determine disposal cost for wastes generated in 1985. (Costs will be in 1980 dollars.)

Example:	Freon	$435
	Hypergols	2,000
	Petrochemicals	55
	Heptane	30
	Hydrocarbons	1,245
	Neutralized QW	32,400
	Oxidizer (pretreated)	201
	Ammonia Water	2
	Hydrazine Citrate	1,460
	Solids	15,916
	Misc. Wastewater	826
	Total Cost, 1980 Dollars	$54,570

4) Convert to 1985 dollars; assuming a 15 percent escalation of costs through 1985:

$$1985 \text{ Cost} = 1980 \text{ Costs } (1.15)^5$$
$$= \$54,570\ (1.15)^5 = \$109,760$$

5) To calculate projected costs for the years 1986 through 1994, assuming a 10 percent escalation of costs each year after 1985: (Recall that waste quantities are increasing by increments of 1.5, 1.67, and 1.5 from 1986 to 1987 to 1988, respectively; and are constant thereafter.)

1986 cost = 1985 cost x 1.65
1987 cost = 1986 cost x 1.833
1988 cost = 1987 cost x 1.65
1989 cost = 1988 cost x 1.1
1990 cost = 1989 cost x 1.1
1991 cost = 1990 cost x 1.1
1992 cost = 1991 cost x 1.1

TABLE 39 (continued)

1993 cost = 1992 cost x 1.1
1994 cost = 1993 cost x 1.1

6) To calculate projected costs for the years 1986 through 1994, the following equations are used: (note that quantities are increasing by increments of 1.5, 1.67, and 1.5 from 1986 to 1987, to 1988, respectively; and are constant thereafter.)

a) 1986 cost = (1985 cost)(1.5)(688/628)
b) 1987 cost = (1986 cost)(1.67)(751/688)
c) 1988 cost = (1987 cost)(1.5)(820/751)
d) 1989 cost = (1988 cost)(1.0)(895/820)
e) 1990 cost = (1989 cost)(1.0)(975/895)
f) 1991 cost = (1990 cost)(1.0)(1062/975)
g) 1992 cost = (1991 cost)(1.0)(1155/1062)
h) 1993 cost = (1992 cost)(1.0)(1255/1155)
i) 1994 cost = (1993 cost)(1.0)(1363/1255)

TABLE 40

TOTAL COST FOR OFF-SITE DISPOSAL, 1985
(1980 Dollars)

Options for VAFB	Cost, $ Casmalia Bulk/Drum*	Kettleman Bulk/drum*	West Covina Bulk†	West Covina Drum
(A) Worst case - all waste disposed of off base; no preconditioning of waste	58,600	60,613	78,728	141,445#
(B) Preconditioning of some wastes**	42,951	54,570	51,112	102,609#
(C) Option (A), but do not ship QW†††	27,312	28,213	3,638	66,355
(D) Option (B), but do not ship QW†††	21,663	22,170	3,555	55,052
Options for Port Hueneme				
(A) Worst case - all waste disposed of off base; no preconditioning of waste	17,113	26,478	37,283	39,502#
(B) Preconditioning of some wastes##	16,933	26,258	37,242	39,062#
(C) Option (A), but do not ship IW or SRB rinse water***	875	1,142	169	2,694
(D) Option (B), but do not ship IW, SRB***	695	922	128	2,255

* Bulk and drum rates used where applicable. See Table 38.

† Bulk only. It is, however, unlikely that all wastes can be shipped bulk.

\# Bulk shipping of QW, SRB, IW; other wastes drummed.

** QW is neutralized (Category 10)
N_2O_2 is oxidized with H_2O_2 (Category 10)
Category 13 is reduced in volume by compressing solids by 20 percent.
Category 11 is reduced in volume by compressing solids by two-thirds.

Treat QW on-base and discharge treated effluent to base facility.

*** Categories 13 and 14, compress solids by 20 percent and 2/3, respectively.

††† IW and SRB are treated on base; effluents discharged to POTW or base.

TABLE 41

PROJECTED COSTS TO DISPOSE OF VANDENBERG STS HAZARDOUS WASTES AT OFF-SITE CLASS I FACILITIES, 1985 THROUGH 1994 (Thousand Dollars)

Option	Class 1 Site	1985	1986	1987	1988	1989	1990	1991	1992	1993	1994	Total Project Cost (125 Launches)	Average Cost Per Launch
A	Casmalia	117.9	194.5	356.7	588.3	647.3	712.0	783.2	861.5	947.4	1,042.3	6,251.1	50.0
	Kettleman	121.9	201.2	368.8	608.6	669.4	736.3	810.0	891.0	980.1	1,078.1	6,465.3	51.7
	West Covina*	151.5	250.0	458.3	756.2	864.0	915.1	1,006.5	1,107.2	1,217.9	1,339.7	8,034.3	64.3
	West Covina†	284.5	469.3	860.3	1,419.6	1,561.5	1,717.3	1,889.4	2,078.4	2,286.2	2,514.8	15,082.0	120.7
B	Casmalia	86.4	142.6	261.3	431.1	474.2	521.9	574.0	631.2	694.5	763.9	4,580.9	36.6
	Kettleman	109.8	181.1	332.0	547.8	602.6	662.8	729.1	802.1	882.3	970.5	58,20.2	46.6
	West Covina*	102.8	169.6	310.9	513.0	564.3	620.7	682.9	751.1	826.2	908.8	5,450.2	43.6
	West Covina†	206.4	340.4	624.3	1,030.1	1,133.1	1,246.4	1,371.1	1,508.2	1,659.0	1,825.2	10,944.0	87.6
C	Casmalia	54.9	90.7	166.2	274.3	301.6	331.8	364.8	401.5	441.5	485.8	2,909.3	23.3
	Kettleman	56.7	93.6	171.6	283.1	311.4	342.5	376.8	414.5	455.9	501.6	3,007.8	24.1
	West Covina*	7.3	12.0	22.2	36.5	40.1	44.2	48.6	53.5	58.9	64.7	388.2	3.1
	West Covina†	133.5	220.3	403.7	666.1	732.7	806.0	886.6	975.3	1,072.2	1,180.1	7,077.0	56.6
D	Casmalia	43.6	72.0	131.8	217.6	239.1	263.1	289.6	318.3	350.3	385.1	2,310.5	18.5
	Kettleman	44.5	73.5	134.9	222.4	244.6	269.1	296.1	325.7	358.2	394.0	2,363.1	18.9
	West Covina*	7.1	11.8	21.6	35.7	39.3	43.1	47.5	52.2	57.5	63.2	379.1	3.0
	West Covina†	110.8	182.7	335.0	552.8	608.0	668.8	735.7	809.3	890.2	979.2	5,872.4	47.0

* Bulk rate (all wastes shipped in bulk).
† Drum rate (QW, SRB, IW wastes are calculated using bulk rates; all other wastes are drummed).

Notes: Does not include sludge from on-base treatment facilities.
1980 costs escalated at 15 percent per annum through 1985.
1985 estimated costs were escalated at 10 percent per annum for following years.

TABLE 42

PROJECTED COSTS TO DISPOSE OF PORT HUENEME STS HAZARDOUS WASTES AT OFF-SITE CLASS I FACILITIES, 1985 THROUGH 1994 (Thousand Dollars)

Option	Class 1 Site	1985	1986	1987	1988	1989	1990	1991	1992	1993	1994	Total Project Cost (125 Launches)	Average Cost Per Launch
A	Casmalia	34.4	56.8	104.1	171.8	189.0	207.9	228.6	251.5	276.6	304.3	1,825.0	14.6
	Kettleman	53.3	87.9	161.2	266.0	292.6	321.8	354.0	389.4	428.4	471.2	2,825.8	22.6
	West Covina*	71.8	118.4	217.1	358.1	361.8	433.3	476.7	524.3	576.8	634.4	3,804.8	30.4
	West Covina†	79.4	131.1	240.3	396.4	436.1	480.0	527.7	580.4	638.5	702.3	4,211.9	33.7
B	Casmalia	34.0	56.2	103.0	170.0	186.9	205.6	226.3	248.9	273.8	301.1	1,806.0	14.4
	Kettleman	52.8	87.1	159.7	263.5	289.8	318.8	350.7	385.8	424.4	466.8	2,799.4	22.4
	West Covina*	74.9	123.6	226.5	373.8	411.2	452.3	497.5	547.2	602.0	662.2	3,971.2	31.8
	West Covina†	78.9	129.6	237.7	392.1	431.4	474.5	521.9	574.1	631.5	694.8	4,166.3	33.3
C	Casmalia	1.8	2.9	5.3	8.8	9.7	10.6	11.7	12.9	14.1	15.6	97.2	0.8
	Kettleman	2.3	3.8	7.0	11.5	12.6	13.9	15.3	16.8	18.5	20.3	122.0	1.0
	West Covina*	0.3	0.6	1.0	1.7	1.9	2.1	2.3	2.5	2.7	3.0	18.0	0.1
	West Covina†	5.4	8.9	16.4	27.1	29.8	32.7	36.0	39.6	43.6	47.9	287.4	2.3
D	Casmalia	1.4	2.3	4.2	7.0	7.7	8.4	9.3	10.2	11.2	12.4	74.1	0.6
	Kettleman	1.9	3.1	5.7	9.5	10.4	11.5	12.6	13.9	15.3	16.8	100.7	0.8
	West Covina*	0.3	0.4	0.8	1.3	1.4	1.6	1.7	1.9	2.1	2.3	13.7	0.1
	West Covina†	4.5	7.5	13.7	22.6	24.9	27.4	30.1	33.1	36.5	40.1	240.5	1.9

* Bulk rate (all wastes shipped in bulk).
† Drum rate (QW, SRB, IW wastes are calculated using bulk rates; all other wastes are drummed).

Notes: Does not include sludge from on-base treatment facilities.
1980 costs escalated at 15 percent per annum through 1985.
1985 estimated costs were escalated at 10 percent per annum for following years.

Costs for Option D, on the average, are 70 percent less than Option A.

It is apparent, on the basis of disposal costs alone, that shipment of high-volume wastewaters (i.e., QW, IW, and SRB) off site is a costly option. Nearly 60 percent of costs are attributable to these waste streams. The reader is referred to Section VI for a detailed analysis of overall waste management cost.

Bulk rates for hazardous waste disposal are less than rates for disposal of drummed waste. Because of severe restrictions on disposal of drummed liquids and drummed reactive/inflammable wastes imposed by RCRA, disposal of drummed wastes can be expected to be extremely costly in the future.

4. OFF-SITE TRANSPORT

A telephone survey of registered haulers serving the VAFB/Port Hueneme area was conducted to determine current transport costs for hazardous wastes. A list of 10 of the firms contacted is presented in Table 43. Of the firms contacted, only Chancellor & Ogden (owned by BKK) offers a full range of services, including transport of bulk and drummed wastes, collection and lifting equipment, and service nationwide. Casmalia, which hauls only its own wastes, intends to expand its hauling service to include transport of bulk liquids; the firm currently hauls only drummed wastes. Other local haulers provide limited service, and for that reason, waste generators must often contract out to several different hauling firms. A list of over 250 firms which are registered to transport hazardous wastes in California as provided in Appendix D.

A summary of transportation rates used to project costs for hauling VAFB and Port Hueneme wastes is given in Table 44. Factors used in calculating costs are included in this table for the following routes:

- VAFB to the Casmalia, Kettleman, and West Covina disposal facilities.
- Port Hueneme to the Casmalia and West Covina disposal facilities, and to VAFB for subsequent treatment and/or on-site disposal.

Costs for transporting bulk liquids were based on current rates for a 5,000-gal vacuum truck. The transport cost for drums was based on rates for 25- or 75-drum-capacity trucks, depending on the equipment assumed to be available for a given route. All rates quoted are current as of November 1980, and assume that all collection and lifting equipment is supplied by the waste generator.

TABLE 43

UNIT COSTS TO TRANSPORT HAZARDOUS WASTES
(1980 Dollars)

Name of Firm	Bulk Liquids	Drummed Solids/Liquids
B&H Service Co. 4705 S. Blosser Rd. Santa Maria, CA 93454 (805) 937-2228	2,200-2,600 gal vacuum truck ($37.99/hr) 3,200-4,200 gal vacuum truck ($38.68/hr) Bulk liquids only Service to Casmalia	--
J. E. Baker, Inc. P.O. Box 1032 Bakersfield, CA 93302 (805) 589-0910	5,000 gal vacuum truck ($40/hr) Bulk liquids only Service to Casmalia	--
Chancellor & Ogden 3031 East I Street Wilmington, CA 90744 (213) 432-8461	2,000 gal vacuum truck ($45.50/hr) 5,000 gal vacuum truck ($50.50/hr) Service to all California	25 drums/trip ($52.50/hr) Service to all California
Casmalia Disposal 539 San Ysidro Road P.O. Box 5275 Santa Barbara, CA 93108 (805) 969-4703	--	27, 63, or 88 drum capacity trucks; 88 drums/trip ($60/hr) Service to Casmalia
Channel Disposal Co., Inc 1482 E. Valley Road P.O. Box 5099 Santa Barbara, CA 93108 (805) 969-3311	--	18 drums/trip ($296 first trip; $236 subsequent trips). Service to Casmalia
Engle & Gran, Inc. P.O. Box B Santa Maria, CA 93456 (805) 925-2771	--	18 drums/trip ($48/hr) Service to Casmalia
Lee & Neal, Inc. 512 E. Gutierrez St. P.O. Box 477 Santa Barbara, CA 93102 (805) 965-5660	2,000 gal vacuum truck ($40.00/hr)	--

TABLE 43 (continued)

Name of Firm	Bulk Liquids	Drummed Solids/Liquids
Marborg Disposal Co. 136 N Quarantina St. P.O. Box 4127 Santa Barbara, CA 93103 (805) 963-1852	--	25 drums/trip ($35/hr) Service to Casmalia
Rich Sand Service Co. P.O. Box 2403 Orcutt, CA 93454 (805) 937-6681	3,000-5,000 gal vacuum truck ($38.68/hr)	--
Eldon H. Smith & Son 4379 Modoc Rd. Santa Barbara, CA 93110 (805) 967-3812	1,500 gal vacuum truck ($240/trip)	--

TABLE 44

TRANSPORTATION RATES
(1980 Dollars)

Factor	VAFB to			Port Hueneme to		
	Casmalia	Kettleman	West Covina	Casmalia	VAFB	West Covina
Trip time, hr	4	10	12	10	8	8
Bulk rate, $/trip (5,000 gal vacuum truck)	160	400	606	400	320	404
Drum rate, $/trip						
18 drum capacity	192					
25 drum capacity	140	350	630	400	320	420
75 drum capacity	240					

Note: These rates are based on unit costs presented in Table 37.

Route time was estimated assuming:

- An average speed of 40 mph for a fully loaded vehicle.
- Two hours for loading and unloading waste.

A sample calculation for estimating annual off-site hauling costs for 1985 through 1994 is provided in Table 45.

Total hauling costs for wastes transported from VAFB and Port Hueneme for the years 1985 through 1994 are presented in Tables 46 and 47, respectively. These costs were inflated using the methodology shown in the sample calculation. The inflation factor assumes that increases in transportation fees will parallel projected increases in the cost of fuel. Included in the above tables are total transportation costs for the STS project, and average costs on a per launch basis. Costs are estimated for each of the four disposal options described in Table 35.

Option D transportation costs for VAFB and Port Hueneme are as follows:

Transport Route	Cost (Thousand $)
1) VAFB to Casmalia; Port Hueneme to Casmalia	320
2) VAFB to Casmalia; Port Hueneme to West Covina	320
3) VAFB to West Covina; Port Hueneme to West Covina	2,700
4) VAFB to Kettleman; Port Hueneme to West Covina	720
5) VAFB wastes disposed of on site; Port Hueneme to VAFB	50

A summary of total project transportation costs for the four disposal options is provided in Table 48. For comparison purposes, disposal fees are included in this table. Values in the table show that transport of high-volume wastewater, i.e., QW, IW, and SRB, is costly. Management of these wastes on site could result in reductions in hauling costs of 60 to 95 percent. These figures do not, however, reflect additional costs for on-site treatment/storage/disposal facilities, and should be viewed accordingly. The reader is referred to Section VI for a comprehensive analysis of overall waste management costs.

5. INCINERATION

Incineration of organic materials converts complex and potentially hazardous compounds into the following combustion products: carbon dioxide (CO_2), water (H_2O), nitrogen oxides (NO_x),

TABLE 45

SAMPLE CALCULATION - COST OF OFF-SITE TRANSPORTATION

Conditions

Option B
Disposal at Kettleman
VAFB wastes

Procedure

1) Select waste categories requiring disposal under Option B (see Table 35).
2) Separate above categories into three groups: bulk liquids, drummed liquids, drummed solids (see Table 38).
3) Select trip costs and determine number of trips required (see Table 44); then calculate costs for each group.
4) Sum costs for each group to obtain transportation cost for wastes generated in 1985 (cost will be in 1980 dollars).

Example

Bulk liquids	= (600,000 gal) - (5,000 gal/trip)	= 120 trips	=	$48,000/yr
Drummed liquids	= (33,813 gal) - (55 gal/drum x 25 drums/trip)	= 24 trips	=	8,400/yr
Drummed solids	= (1,061 drums) - (25 drums/trip)	= 42 trips	=	14,700/yr
	Total Cost, 1980 dollars		=	$71,100/yr

Escalation of Costs

1) Apply the following regression equation to predict values of the fuels price index:*

   a) $X = 4.2323 + [(8.8023E\text{-}13) \times (Y)^{7.7}]$

      where X is the estimated index for year Y

   b) 1985 index $= -4.2323 + [(8.8023E\text{-}13) \times (85)^{7.7}] = 628$

   c) 1980 index $= -4.2323 + [(8.8023E\text{-}13) \times (80)^{7.7}] \doteq 412$

2) Calculate the future cost:

   a) $\frac{\text{Future Cost}}{\text{Cost Today}} \quad \frac{\text{Estimated Future Index}}{\text{Estimated Today's Index}}$

   b) 1985 cost = $71,100 (628/412) = $108,376

3) To calculate projected costs for the years 1986 through 1994, the following equations are used (note that waste quantities are increasing by increments of 1.5, 1.67, and 1.5 from 1986 to 1987, to 1988, respectively, and are constant thereafter):

TABLE 45 (continued)

a) 1986 cost = (1985 cost)(1.5)(688/628)
b) 1987 cost = (1986 cost)(1.67)(751/688)
c) 1988 cost = (1987 cost)(1.5)(820/751)
d) 1989 cost = (1988 cost)(1.0)(895/820)
e) 1990 cost = (1989 cost)(1.0)(975/895)
f) 1991 cost = (1990 cost)(1.0)(1,062/975)
g) 1992 cost = (1991 cost)(1.0)(1,155/1,062)
h) 1993 cost = (1992 cost)(1.0)(1,255/1,155)
i) 1994 cost = (1993 cost)(1.0)(1,363/1,255)

* From Survey of Current Business, U.S. Department of Commerce (1980). Based on Petroleum Products, Refined (Fuels), commodity price indices, base year 1967 = 100.

TABLE 46

PROJECTED COSTS FOR TRANSPORTING VAFB HAZARDOUS WASTES TO OFF-SITE CLASS I DISPOSAL FACILITIES, 1985 THROUGH 1994 (Thousand Dollars)

Option	Class 1 Facility	1985	1986	1987	1988	1989	1990	1991	1992	1993	1994	Total Project Cost (125 Launches)	Average Cost Per Launch
A	Casmalia*	46.6	76.5	139.5	228.4	249.3	271.6	295.8	321.7	349.6	379.6	2,358.6	18.9
	Kettleman†	116.5	191.3	348.8	571.1	623.3	679.0	739.5	804.3	874.0	949.0	5,896.5	47.2
	West Covina#	150.9	248.0	452.3	740.6	808.4	880.7	959.3	1,043.3	1,133.6	1,231.2	7,648.4	61.2
B	Casmalia	43.4	70.8	129.0	211.3	230.6	251.3	273.6	297.6	323.4	351.3	2,181.9	17.5
	Kettleman	108.4	178.1	324.7	531.8	580.5	632.4	688.8	749.1	814.0	884.0	5,491.8	43.9
	West Covina	139.7	229.6	418.4	685.3	748.0	814.8	887.5	965.3	1,048.8	1,139.2	7,076.5	56.6
C	Casmalia	17.3	28.4	51.8	84.8	92.6	100.8	109.8	119.4	129.8	141.0	875.7	7.0
	Kettleman	43.3	71.0	129.5	212.0	231.5	252.0	274.5	298.5	324.5	352.5	2,189.3	17.5
	West Covina	62.2	102.4	186.6	305.5	333.5	363.4	395.8	430.4	467.6	508.0	3,155.4	25.2
D	Casmalia	5.2	8.5	15.6	25.5	27.8	30.3	33.0	35.9	39.0	42.4	263.2	2.1
	Kettleman	13.0	21.3	39.0	63.8	69.5	75.8	82.5	89.8	97.5	106.0	658.0	5.3
	West Covina	51.0	83.8	152.8	250.2	333.1	297.5	324.1	352.4	382.9	415.9	2,643.7	21.1

* Assume 2 hrs travel time, round trip, 2 hrs load/unload time.

† Assume 8 hrs travel time, round trip, 2 hrs load/unload time.

\# Assume 10 hrs travel time, round trip, 2 hrs load/unload time.

TABLE 47

PROJECTED COSTS FOR TRANSPORTING PORT HUENEME HAZARDOUS WASTES TO CLASS I DISPOSAL FACILITIES, 1985 THROUGH 1994 (Thousand Dollars)

Option	Class 1 Facility	1985	1986	1987	1988	1989	1990	1991	1992	1993	1994	Total Project Cost (125 Launches)	Average Cost Per Launch
A	Casmalia*	59.1	97.1	177.0	290.1	345.6	376.5	410.1	446.0	484.6	526.3	3,212.4	25.7
	West Covina†	52.3	85.9	156.7	256.6	280.1	305.1	332.3	361.4	392.7	426.5	2,649.6	21.2
	VAFB#	47.3	77.7	141.7	232.1	253.3	275.9	300.6	326.9	355.2	385.7	2,396.4	19.2
B	Casmalia	58.5	96.1	175.0	286.6	312.9	340.8	371.2	403.7	438.7	476.4	2,959.9	23.7
	West Covina	51.8	85.1	155.2	254.1	277.4	302.2	329.1	358.0	389.0	422.4	2,624.3	21.0
	VAFB	46.8	76.9	140.2	229.6	250.6	273.0	297.4	323.4	351.4	381.7	2,367.6	18.9
C	Casmalia	1.8	3.0	5.4	8.8	9.7	10.5	11.5	12.5	13.5	14.7	91.4	0.7
	West Covina	1.7	2.8	5.1	8.3	9.1	9.9	10.8	11.7	12.8	13.9	86.1	0.7
	VAFB	1.5	2.5	4.5	7.4	8.0	8.8	9.5	10.4	11.3	12.2	76.1	0.6
D	Casmalia	1.1	1.8	3.3	5.4	5.9	6.4	7.0	7.6	8.3	9.0	55.8	0.4
	West Covina	1.1	1.8	3.3	5.4	5.9	6.4	7.0	7.6	8.3	9.0	55.8	0.4
	VAFB	1.0	1.6	2.9	4.8	5.2	5.7	6.2	6.7	7.3	7.9	49.3	0.4

* Assumes 8 hrs travel time round trip, 2 hrs load/unload time.

† Assumes 5 hrs travel time round trip, 2 hrs load/unload time.

\# Assumes 6 hrs travel time round trip, 2 hrs load/unload time.

TABLE 48

SUMMARY OF TRANSPORTATION AND DISPOSAL COSTS FOR THE STS PROJECT, 1985 - 1994 (million dollars)

Origin of Waste	Operation	Costs for Each Option A	B	C	D	Destination of Waste
V & P	Transport	5.6	5.1	0.98	0.32	Casmalia
	Disposal	8.1	6.4	3.0	2.5	
	Total	13.7	11.5	3.98	2.82	
V	Transport	2.4	2.2	0.88	0.26	Casmalia
	Disposal	6.3	4.6	2.9	2.3	
	Total	8.7	6.8	3.78	2.56	
V & P	Transport	10.3	9.7	3.2	2.5	West Covina
	Disposal	19.3	15.1	7.4	6.1	
	Total	29.6	24.8	10.6	8.6	
P	Transport	2.6	2.6	0.09	0.06	West Covina
	Disposal	4.2	0.2	0.29	0.24	
	Total	6.8	6.8	0.38	0.30	
V	Transport	5.8	5.5	2.2	0.66	Kettleman
	Disposal	6.5	5.8	3.0	2.4	
	Total	12.3	11.3	5.2	3.06	
P	Transport	2.6	2.4	0.09	0.05	VAFB

V = Vandenberg AFB
P = Port Hueneme

Option A = All wastes disposed off base; no preconditioning.

Option B = Preconditioning of some wastes:
VAFB: Category 10 (QW and N_2O_4), 13, and 14
PH: Category 13 and 14.

Option C = Same as A, except:
VAFB: QW (Category 10) neutralized and discharged to evaporation pond
PH: IW (Category 15) and SRB (Category 9) treated on base and discharged to base facility or POTW.

Option D = Same as B, except:
VAFB: QW not disposed of at an off-base land disposal facility
PH: IW and SRB not disposed of at an off-base land disposal facility.

and hydrochloric acid (HCl). The latter two gases, which are potential air pollutants, must be controlled either through combustion controls or exhaust gas scrubbing. Residues from incineration could possibly be landfilled on site.

Space shuttle program hazardous wastes suitable for disposal by incineration include:

- Category 2 - Hypergolic fuels and hypergolic fuel-contaminated water and alcohol.
- Category 3 - Group I hydrocarbon wastes.
- Category 5 - Group II hydrocarbon wastes.
- Category 11 - Fuel vapor scrubber wastes (possible).
- Category 13 - Combustible solids.

Of these, only Category 13 is solid material.

Three alternative waste incineration strategies are considered feasible. These are:

- Transport of baseline and contingency wastes off site to a commercial incineration facility.
- Installation of a dedicated on-site incineration facility for baseline wastes, and hauling of contingency wastes off site to a commercial incineration facility.
- Installation of a dedicated on-site incineration facility for baseline and contingency wastes.

The nearest operating commercial waste incineration facility to VAFB is operated by Rollins Environmental Services, Inc., located near Houston, Texas. The one-way haul distance to this plant is 1,500 mi. A similar facility, to be located near Beatty, Nevada, has been proposed but may never be constructed. The one-way haul distance from VAFB to Beatty is approximately 300 mi.

The cost of incinerating waste products at commercial facilities is based on material characteristics, e.g., Btu content, handling properties, toxicity, etc. Due to the variability in waste composition, a laboratory analysis is performed on all incoming shipments, and charges are then established accordingly. Consequently, precise estimates of the cost associated with commercial incineration of space shuttle wastes are difficult to make. Preliminary price estimates were obtained from Rollins based on expected waste quantities and qualities. These data are presented in Table 49.

TABLE 49

COMMERCIAL INCINERATION COSTS FOR COMBUSTIBLE WASTES

Trt Cat	Waste Type	Baseline Amt/Launch	Contingency Amt/Event	Incineration Fee (1980) Baseline	Incineration Fee (1980) Contingency
2	Monomethylhydrazine wastewater	170 gal		$160	
2	Hydrazine wastewater	830 gal		770	
2	Monomethylhydrazine	120 gal	3,420 gal	120	$3,320
2	Hydrazine	100 gal	1,260 gal	100	1,220
2	LBM Propellant		20,970 gal		20,340
3	Hydrocarbon fuels	140 gal		100	
5	Liquid insulation and paint	60 gal		90	
5	Methylene chloride	350 gal		480	
5	Perchlorethylene	350 gal		520	
5	Other solvents	390 gal		580	
11	Fuel scrubber wastes	1,060 gal		1,570	
13	Solid insulation	2,530 lbs		320	
13	Contaminated containers	5,000 lbs		630	
13	Contaminated rags, filters,etc.	250 lbs		30	
13	SRB propellant		1,111,800 lbs		137,500
	Total Cost			$5,470	$162,380

No estimate can be made of future disposal costs at the proposed BKK incineration facility in Beatty, Nevada. Total projected transport and disposal costs for off-site disposal are presented in Table 50.

Several firms currently manufacture package hazardous waste incineration systems compatible with selected space shuttle program wastes. The standard package consists of a feeding system, rotary kiln, afterburner chamber, air emission control device, exhaust fan, and stack (see Figure 26). These package systems are available in several standard capacities, ranging from approximately 0.02 to 1.5 tons per hour (as fed).

Table 51 lists the available sizes of package hazardous waste incineration systems and the corresponding hours of operation per launch required for waste disposal. Also listed next to each unit is the approximate capital cost in 1980 and 1985 dollars.

To determine the total hazardous waste disposal costs, as presented in Table 50, transport and facility charges for contingency wastes must be added to the cost reported in Table 49 for baseline waste incineration.

A reasonably sized incineration system, considering baseline wastes only, would be the 0.04-ton-per-hour unit listed in Table 51. In the event of a contingency, however, 3.2 months of 24-hour operation would be required to incinerate the resultant combustible hazardous wastes. If one on-site facility were established for incineration of both baseline and contingency wastes, a larger unit would be required. Storage expenses are not included in the Table 50 cost estimates. However, if storage were a factor considered in this cost estimate, the associated expense would offset the cost of a larger incinerator (since storage is generally much less expensive).

A reasonably sized incineration unit for both baseline and contingency wastes would be the 1.3-ton-per-hour unit shown in Table 51. However, as evidenced by Table 49, the cost for incinerating contingency wastes on site is much greater than the corresponding cost of commercial disposal.

Santa Barbara County air pollution regulations (Rule No. 309 for Region II areas), which govern VAFB emissions, specify a maximum NO_x emission rate of 140 lb per hour (as NO_2) from combustion sources. Since hydrazine is 88 percent nitrogen by weight, the potential of exceeding the NO_x limit is high. For example, using the 0.04-ton-per-hour unit, if 100 percent hydrazine were fed, NO_2 emissions would be 230 lb per hour, slightly exceeding the limit (considering that virtually all fuel-bound N_2 is conperted to NO_2). Fortunately, less than half of the baseline wastes contain hydrazine. By blending hydrazine with hydrocarbon wastes and regulating its flow rate to the combustion chamber, NO_x formation from fuel-bound nitrogen can be controlled.

TABLE 50

CAPITAL AND O&M COSTS FOR DIFFERENT THERMAL WASTE PROCESSING ALTERNATIVES (DOLLARS)

Alternative	Site	Equipment	Capital Costs 1985	O & M costs for transportation/incineration										
				1985	1986	1987	1988	1989	1990	1991	1992	1993	1994	Project Total
Transport and incinerate all wastes off-site	Houston, TX	Tanker/Container truck	-	301,000	490,000	887,000	1,449,000	1,582,000	1,723,000	1,877,000	2,041,000	2,218,000	2,409,000	14,977,000
	Beatty, NV	"	-	10,000*	16,000*	28,000*	46,000*	51,000*	55,000*	60,000*	65,000*	71,000*	77,000*	479,000*
Incinerate baseline wastes on-site and transport and incinerate contingency wastes off-site	Vandenberg & Houston TX	1 TPH rotary kiln incinerator & Tanker/Container truck	3,720,000†	19,000	23,000	29,000	38,000	42,000	45,000	49,000	53,000	57,000	63,000	4,138,000
	Vandenberg & Beatty NV	1 TPH rotary Kiln incinerator & Tanker/Container truck	3,720,000†	6,000*	8,000*	13,000*	20,000*	22,000*	24,000*	26,000*	28,000*	30,000*	32,000*	3,927,000*
Incinerate all wastes on-site	Vandenberg	1.3 TPH rotary kiln incinerator	9,460,000†	4,000	6,000	11,000	18,000	20,000	21,000	23,000	25,000	28,000	30,000	9,646,000

* Incineration costs not included.

† Excludes storage facility costs.

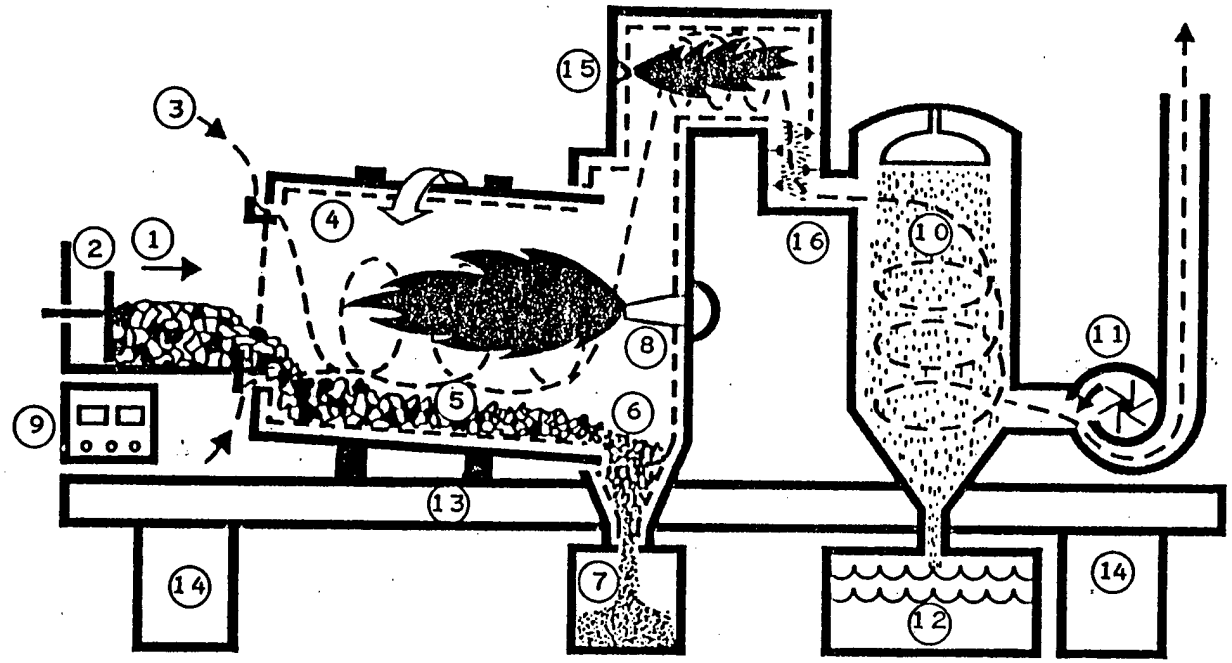

LEGEND:

1 WASTE TO INCINERATOR
2 AUTO-CYCLE FEEDING SYSTEM:
FEED HOPPER, PNEUMATIC FEEDER, SLIDE GATES
3 COMBUSTION AIR IN
4 REFRACTORY-LINED, ROTATING CYLINDER
5 TUMBLE-BURNING ACTION
6 INCOMBUSTIBLE ASH
7 ASH BIN
8 AUTO-CONTROL BURNER PACKAGE:
PROGRAMMED PILOT BURNER
9 SELF-COMPENSATING INSTUMENTATION-CONTROLS
10 WET-SCRUBBER PACKAGE:
STAINLESS STEEL, CORROSION-FREE
WET SCRUBBER; GAS QUENCH
11 EXHAUST FAN AND STACK
12 RECYCLE WATER, FLY-ASH SLUDGE COLLECTOR
13 SUPPORT FRAME
14 SUPPORT PIERS
15 AFTERBURNER CHAMBER
16 PRECOOLER

Figure 26. Incineration schematic.

TABLE 51

HAZARDOUS WASTE SYSTEM SELECTION CRITERIA

System Capacity (TPH)	Operating Time Per Launch (Hr)	Capital Cost ($)		Operating Time Per Contingency (Hr)
		1980	1985	
.02	36.0	1,225,000	1,925,000	5,100
.04	18.0	2,400,000	3,800,000	2,550
.09	8.0	4,700,000	7,425,000	1,133
.20	3.6	5,350,000	8,450,000	510
.70	1.0	5,875,000	9.275,000	146
1.3	.6	6,100,000	9,650,000	79
1.5	.5	6,900,000	10,900,000	68

NO_x is also formed from atmospheric nitrogen in high-temperature regimes. Combustion controls, ammonia injection, and catalytic conversion are all means of reducing the emission of NO_x from incineration equipment. An engineering assessment to determine the best control strategy would be based on the final incinerator design.

In the case of contingency waste incineration, the large volumes involved would make attainment of the 140-lb-per-hour NO_x limit extremely difficult. Blending of the hydrazine wastes with other materials to the maximum extent possible would still result in NO_x emissions in excess of 1.5 tons per hour, which is more than one order of magnitude greater than the emissions limit. Technical means do not exist for a NO_x reduction of this magnitude.

SECTION VI

SUPPORT FUNCTIONS

1. INTRODUCTION

Components which are necessary and integral to overall hazardous waste management include on-site hazardous waste storage facilities, the pickup of these wastes and their delivery to the on-site storage/transfer station, and their subsequent transfer and transport to treatment, recovery, and/or ultimate disposal sites. For the implementation of a comprehensive waste management system, it is evident that special equipment and procedures must be used, due to the wide variety of hazardous wastes, the variabilities in their physical and chemical properties, and the need to safely store, transfer, and transport them. The technical and economic aspects of storage, on-site transportation, and transfer of hazardous waste materials are presented below.

2. WASTE STORAGE AT SOURCE

The foundations of an effective hazardous waste management program are identification and storage of the waste by generator. Segregation of incompatible wastes as well as other wastes that should not be mixed is of utmost importance. Namely, many wastes, when mixed with others, can produce hazardous situations through heat generation, fires, explosions, or release of toxic substances. A list of potentially incompatible waste materials is given in Table 52, along with guidelines for their handling and disposal.

Table 53 lists commonly used methods for the on-site storage of hazardous wastes prior to pickup and hauling to an on-site transfer station for treatment, recycle, and/or disposal. Also listed in Table 53 are various physical forms and categories of hazardous wastes suitable for containment by the respective storage methods.

Lagoons are generally suitable for storage of pumpable wastes. They are usually constructed at or below grade elevations.

Open or closed pits are generally adaptable to the storage of all forms of hazardous wastes. Pastes and solid materials may

TABLE 52

LIST OF POTENTIALLY NONCOMPATIBLE WASTES*

Group 1-A	Group 1-B
Alkaline caustic liquids	Acid sludge
Alkaline cleaner	Acid and water
Alkaline corrosive liquids	Battery acid
Alkaline corrosive battery fluid	Chemical cleaners
Caustic wastewater	Electrolyte, acid
Lime sludge and other corrosive alkalies	Etching acid liquid or solvent
Lime wastewater	Liquid cleaning compounds
Lime and water	Pickling liquor and other corrosive acids
Spent caustic	Sludge acid
	Spent acid
	Spent mixed acid
	Spend sulfuric acid

Potential Consequences: Heat generation, violent reaction

Group 2-A	Group 2-B
Asbestos waste and other toxic wastes	Cleaning solvents
Beryllium wastes	Data processing liquid
Unrinsed pesticide containers	Obsolete explosives
Waste pesticides	Petroleum waste
	Refinery waste
	Retrograde explosives
	Solvents
	Waste oil and other flammable and explosive wastes

Potential Consequences: Release of toxic substances in case of fire or explosion.

Group 3-A	Group 3-B
Aluminum	Any waste in Group 1-A or Group 1-B
Beryllium	
Calcium	
Lithium	
Magnesium	
Potassium	
Sodium	
Zinc powder and other reactive metals and metal hydrides	

TABLE 52 (continued)

Potential Consequences: Fire or explosion. Generation of flammable hydrogen gas

Group 4-A	Group 4-B
Alcohols Water	Any concentrated waste in Groups 1-A or 1-B Calcium Lithium Metal hydrides Potassium Sodium SO_2Cl_2, $SOCl_2$, PCl_3, CH_3SiCl_3, and other water-reactive wastes

Potential Consequences: Fire, explosion, or heat generation. Generation of flammable or toxic gasses.

Group 5-A	Group 5-B
Alcohols Aldehydes Halogenated hydrocarbons Nitrated hydrocarbons and other reactive organic compounds and solvents Unsaturated hydrocarbons	Concentrated Group 1-A or 1-B wastes Group 3-A wastes

Potential Consequences: Fire, explosion, or violent reaction

Group 6-A	Group 6-B
Spent cyanide solutions	Group 1-B wastes

Potential Consequences: Generation of toxic hydrogen cyanide gas

Group 7-A	Group 7-B
Chlorates and other strong oxidizers Chlorine Chlorites Chromic acid Hypochlorites Nitrates Nitric acid, fuming Perchlorates Permanganates Peroxides	Acetic acid and other organic acids Concentrated mineral acids Group 2-B wastes Group 3-A wastes Group 5-A wastes, and other flammable and combustible wastes

TABLE 52 (continued)

Potential Consequences: Fire, explosion, or violent reaction

* Guidelines for the handling and disposal of noncompatible wastes:
  1. Noncompatible wastes should not be mixed in the same transportation or storage container.

  2. A waste should not be added to an unwashed transportation or storage container that previously contained a noncompatible waste.

  3. Noncompatible wastes should not be combined in the same pond, landfill, soil-mixing area, well, or burial container. An exception is the controlled neutralization of acids and alkalies in disposal areas. Containers which hold noncompatible wastes should be well separated by soil or refuse when they are buried. Ideally, separate disposal areas should be maintained for noncompatible wastes.

  4. Noncompatible wastes should not be incinerated together. An exception is the controlled incineration of pesticides and other toxic substances with flammable solvents.

TABLE 53

SELECTED LIST OF COMMONLY USED HAZARDOUS WASTE STORAGE METHODS

	Waste Type				
Storage Method	Liquids	Slurries	Sludges	Pastes	Solids
Lagoons	Yes	Yes	Yes	No	No
Pits	Yes	Yes	Yes	Yes	Yes
Drums	Yes	Yes	Yes	Yes	Yes
Bags	No	No	No	Yes	Yes
Stationary Tanks	Yes	Yes	Yes	No	No
Mobile Tanks	Yes	Yes	Yes	No	No
Mobile Containers	No*	No*	No*	Yes	Yes

* Special optional fittings are available to adapt some mobile containers for the storage and haulage of liquids, slurries and sludges without spillage.

be removed by means of a clam bucket or similar excavating device. Liquids, slurries, and sludges can be either pumped or lifted by means of vacuum.

Drums have wide application for all forms of hazardous wastes. They can be fitted with a liner to prevent corrosive attack by their contents. They can be moved with convenience by one man using a special dolly or hand truck built for this purpose. Drums also offer the advantage that waste materials can be placed directly into them, and they can then be sealed at the waste generation source with no further need for transferring the wastes to another vessel until they reach the treatment facility or disposal site. Drums can be handled either singly or in multiples on pallets, and can be readily loaded and shipped on flatbed trucks or vans, or in gondola-type railcars.

Plastic bags and other miscellaneous boxes, cartons, containers, receptacles, etc., enclosed in plastic bags, can be used, where appropriate, to store hazardous wastes that are generally in a paste or solid form.

Stationary tanks are located permanently on the hazardous waste generator's site, and must be constructed of, or lined with, a material that is compatible with the waste being held. Stationary tanks are generally suited for handling pumpable or free-flowing wastes only. Tanks must be properly vented; for the storage of particularly noxious liquids having a high vapor pressure, any vented vapors or fumes should be scrubbed to prevent escape into the environment. Liquids having a low flashpoint can be stored under a pressurized nitrogen atmosphere to prevent the occurrence of explosive conditions in the tank. Individual tanks or groups of tanks should be surrounded by a retaining wall or impervious berm such that rupture of a tank would not result in an escape of hazardous wastes into the environment.

Mobile tanks and mobile containers have been adapted to both road transport (such as roll-off and luggar tanks and containers) and rail transport (such as tank and gondola cars). Tanks are more suited to pumpable wastes, whereas containers, unless specially outfitted for handling liquids, are more suited to pasty and solid materials. In either case, containers offer the advantage that waste materials can be placed directly into them immediately upon generation at the source. There is no need to transfer the wastes to another vessel until they reach the treatment or disposal area.

Table 54 summarizes the commonly accepted practice in North America for the storage and hauling of various types of hazardous wastes. The table clearly shows that black iron, PVC, rubber, and stainless steel are the materials most often used for those parts which come into direct contact with the wastes. In general, stainless steel or PVC-lined equipment is used in applications where corrosion may be a problem. In those instances where the corrosive conditions could be particularly aggresive

TABLE 54

SELECTED LIST OF HAZARDOUS WASTES AND CORRESPONDING COMMONLY ACCEPTED STORAGE, HANDLING AND TRANSPORTATION METHODS

Type of Waste	On-Site Storage Method	Type of Transportation Vessel	Type of Transportation Vehicle	
			For Short Hauls	For Long Hauls
Inorganic Wastes:				
Acids - weak	Black Iron Tank	Black Iron Vacuum Tank	Vacuum Tank	Vacuum Tractor Trailer
Acids - strong	316 S.S. Tank	316 S.S. Vacuum Tank	Vacuum Tank	Vacuum Tractor Trailer
Acids - HF, HCl, HNO_3	Rubber or PVC Lined Tank	Rubber or PVC Lined Vacuum Tank	Vacuum Tank	Vacuum Tractor Trailer
Alkalis	Black Iron Tank	Black Iron Vacuum Tank	Vacuum Tank	Vacuum Tractor Trailer
Heavy Metal Bearing Sludges (Pb, Cr, etc.)				
- Strongly acidic	316 S.S. Tank	316 S.S. Vacuum Tank	Vacuum Tank	Vacuum Tractor Trailer
- Weakly Acidic & Basic	Roll-Off Sludge Container	Roll-Off Sludge Container	Tilt-Frame Truck	2 Roll-Offs/Flat Deck Tractor Trailer
Cu, Al or Mg Sludges				
- Acidic	316 S.S. Tanks	316 S.S. Vacuum Tank	Vacuum Tank	Vacuum Tractor Trailer
- Basic	Black Iron Tank	Black Iron Vacuum Tank	Vacuum Tank	Vacuum Tractor Trailer
Cyanide Solutions	Black Iron Tank	Black Iron Vacuum Tank	Vacuum Tank	Vacuum Tractor Trailer
Photographic Wastes	PVC Lined & Sealed Drums	Van	Van	Tractor Trailer Van
Ammonia Wastes	Black Iron Tank	Black Iron Vacuum Tank	Vacuum Truck	Vacuum Tractor Trailer
Asbestos Wastes	Sealed Plastic Bags	Roll-Off Container	Tilt-Frame Truck	2 Roll-Offs/Flat Deck Tractor Trailer

Table 54 (continued)

Type of Waste	On-Site Storage Method	Type of Transportation Vessel	Type of Transportation Vehicle: For Short Hauls	Type of Transportation Vehicle: For Long Hauls
Miscellaneous Wastes: (cont'd)				
Paint Wastes				
- Liquid	Drums/Black Iron Tank	Van/Black Iron Vacuum Tank	Van/Vacuum Truck	Tractor Trailer Van/ Vacuum
- Solid (i.e., in original cans)	Roll-Off Container	Roll-Off Container	Tilt-Frame Truck	2 Roll-Offs/Flat Deck Tractor Trailer
Tank Bottom Sediments	Black Iron Tank	Black Iron Vacuum Tank	Vacuum Tank	Vacuum Tractor Trailer
Waste Chemicals	Sealed Plastic Bags in Drums	Van	Van	Tractor Trailer Van
Contaminated Soil & Sand	Drums/Roll-Off Container	Van/Roll-Off Container	Van/Tilt Frame Truck	Tractor Trailer/Van/ 2 roll-Offs/Flat Deck Tractor Trailer
Contaminated Clothing & Equipment	Sealed Drums/Plastic Bags	Van/Roll-Off Container	Van/Tilt Frame Truck	Tractor Trailer/Van/ 2 Roll-Offs/Flat Deck Tractor Trailer
Spent Activated Carbon	PVC Lined and Sealed Drums	Van	Van	Tractor Trailer Van
Explosives	Specially Packaged	Special Van	Special Van	Special Van
Organic Wastes:				
PCB Wastes	Sealed Steel Drum	Van	Van	Van
- Liquids	Sealed Steel Drum	Van	Van	Van
- Solids	Plastic Bags in Sealed Steel Drum			

Table 54 (continued)

Type of Waste	On-Site Storage Method	Type of Transportation Vessel	Type of Transportation Vehicle: For Short Hauls	Type of Transportation Vehicle: For Long Hauls
Waste Oils & Oily Wastes	Black Iron Tank	Black Iron Vacuum Tank	Vacuum Tank	Vacuum Tractor Trailer
Solvents	Black Iron Tank	Black Iron Vacuum Tank	Vacuum Tank	Vacuum Tractor Trailer
Pesticides	PVC Lined & Sealed Drums	Van	Van	Tractor Trailer Van
Phenols	316 S.S. Tank	316 S.S. Vacuum Tank	Vacuum Truck	Vacuum Tractor Trailer
Plastic Resin Latex Wastes	Black Iron Tank	Black Iron Vacuum Tank	Vacuum Truck	Vacuum Tractor Trailer
Miscellaneous Wastes:				
General Mixed Aqueous Wastes	Black Iron Tank	Black Iron Vacuum Tank	Vacuum Truck	Vacuum Tractor Trailer
Ink Wastes				
- Liquid	Drums	Van	Van	Tractor Trailer Van
- Solids	Roll-Off Sludge Container	Roll-Off Sludge Container	Tilt-frame Truck	2 Roll-Offs/Flat Deck Tractor Trailer

* Where roll-off containers are indicated in the above table, luggar containers may be used as an alternate.

(e.g., hydrofloric, hydrochloric, and nitric acids), rubber-lined equipment is preferred. Otherwise, black iron equipment is acceptable for handling a wide variety of hazardous wastes.

3. LOADING AND UNLOADING OF HAZARDOUS WASTES

Table 55 lists commonly used methods for transferring various hazardous waste materials from one vessel or vehicle to another.

The forklift and hand truck methods are generally better adapted to dealing with relatively low volumes of hazardous wastes. Transfer by gravity flow, vacuum lift, and pumping are suitable for both small and large quantities of hazardous pumpable materials.

Roll-off tanks and containers and luggar containers are transferred with their contents to a vehicle which transports them to the transfer station for treatment, recycle, or ultimate disposal.

4. WASTE COLLECTION

Collection of hazardous waste, i.e., their pickup and hauling to an on-site centralized transfer station, could be performed by a private collector or by Air Force personnel. Collection costs by military personnel were estimated at $0.32 per mi (FY 1980), while contractor rates were taken at an average of $40 per hour (FY 1980). Assuming that the collection process would cover 100 mi, take 4 hours to complete, and occur once weekly, an estimation of yearly costs for each collector was made. Table 56 shows that military collection would cost $41,070 for the entire project, whereas a private collector would cost $205,338 over the 10-year span. Other factors, such as the ability to handle large fluctuations in waste generation, would favor collection by military personnel.

5. STORAGE/TRANSFER STATION

Transfer stations are an essential component of a hazardous waste management scheme. They provide a phase wherein the payloads of the short-haul collection vehicles can be off-loaded to interim storage for subsequent transfer to treatment, recycle, and/or disposal site.

The implementation of a central waste storage/transfer station would be advantageous for several reasons. Such a facility would allow for consolidation into larger, more economical loads, and reduce waste collection time by providing generators with a place to deliver wastes. Secondly, the operation of this facility would be economically advantageous to establishing storage, recontainerization, and solid waste volume reduction facilities at numerous remote locations. Finally, a centralized storage/

TABLE 55

SELECTED LIST OF COMMONLY USED HAZARDOUS WASTE LOADING AND UNLOADING METHODS

Loading/Unloading Methods	Waste Type						
	Liquids	Slurries	Light Sludges	Heavy Sludges	Pastes	Free-Flowing Solids	Bulk Solids
Gravity Flow	Yes	Yes	Yes	Yes	No	Yes	No
Vacuum Flow	Yes	Yes	Yes	No	No	No	No
Pump	Yes	Yes	Yes	Yes	No	No	No
Screw, Bucket & Belt Conveyors	No	No	No	No	Yes	Yes	Yes
Fork Lift Truck	Yes*	Yes*	Yes*	Yes*	Yes*	Yes*	Yes
Hand Truck	Yes*	Yes*	Yes*	Yes*	Yes*	Yes*	Yes
Roll-on Tank	Yes	Yes	Yes	Yes	No	No	No
Roll-on Container	No†	No†	No†	No†	Yes	Yes	Yes
Luggar Container	No†	No†	No†	No†	Yes	Yes	Yes

* Presumes the waste material is contained in a drum or other suitable vessel.

† Special optional fittings are available to adapt some mobile containers for the transport of liquids, slurries and sludges without spillages.

TABLE 56

COMPARISON OF AIR FORCE VERSUS CONTRACTOR COLLECTION COSTS PER YEAR*

Collector	1985	1986	1987	1988	1989	1990	1991	1992	1993	1994	Project Total
Military Collection (32¢/mile in 1980)	2,577	2,835	3,118	3,430	3,773	4,150	4,565	5,022	5,524	6,076	41,070
Contractor Collection (4 hrs) ($40/hr in 1980)	12,884	14,172	15,590	17,149	18,863	20,750	22,825	25,107	27,618	30,380	205,338

* Calculations based on hauling distance of 100 miles per 4 hours day, 50 days per year.

transfer station may also serve as a single transfer point for consolidating paperwork associated with hazardous waste management.

The construction of an on-site storage/transfer facility would require several planning steps dictated by the state government. The first step would be the filing of an Application for Operating Permit for Facilities Receiving Hazardous Waste. Appendix E displays the sample application form and instructions for completing it (Form No. EH 188). The submission of an Operation Plan for a hazardous waste facility to the California Department of Health would also be required. Instructions for preparing an Operation Plan are included in Appendix F.

A central location for the facility should be determined by base planners. The size and nature of the facility would be dictated by the quantities of wastes generated at the base. Transfer stations are usually sized to meet peak anticipated vehicular movements and waste receipts in order to avoid bottlenecks. They should be capable of handling waste materials arriving in all forms and in all types of vessels used in the immediate collection area. The materials of construction of the bulk storage tanks and other vessels should be compatible with the nature of the wastes being received to avoid equipment damage due to corrosion.

Presently, VAFB stores hazardous waste at a concrete pad (SLC-1 East) on NVAFB. It is conceivable that this area could be developed into a hazardous waste storage/transfer facility.

A planned layout of a typical size facility is shown in Figures 27 and 28. Exact plans should be based on the expected monthly waste generation plus a small percentage of excess waste. The capital cost for the above storage/transfer station is estimated to be $203,500 (FY 1980). A cost breakdown is shown in Table 57. The associated projected O&M costs are summarized in Table 58.

6. SOLID WASTE VOLUME REDUCTION

Solid hazardous wastes are usually placed in 55-gallon drums and buried at Class I landfills. The future of this option is doubtful, because under the interim final RCRA regulations (Section 265.315), landfilling of empty containers is prohibited, unless they have previously been crushed flat, shredded, or, in some other manner, reduced in volume before incorporation into a landfill. In some cases, the landfill may provide the required volume reduction services. On-base construction of a solid waste volume reduction facility should also be considered.

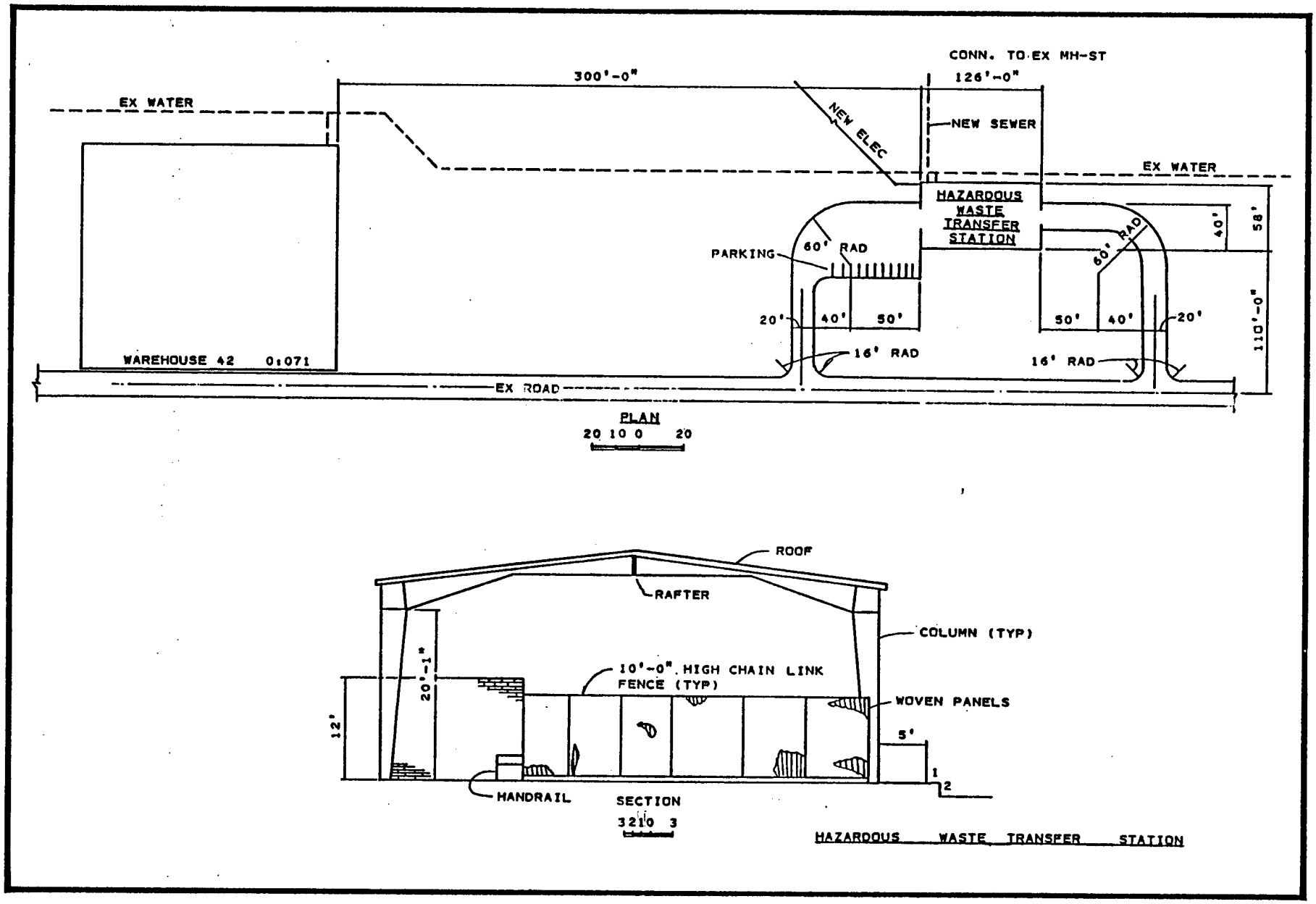

Figure 27. General layout of hazardous waste storage/transfer facility area.

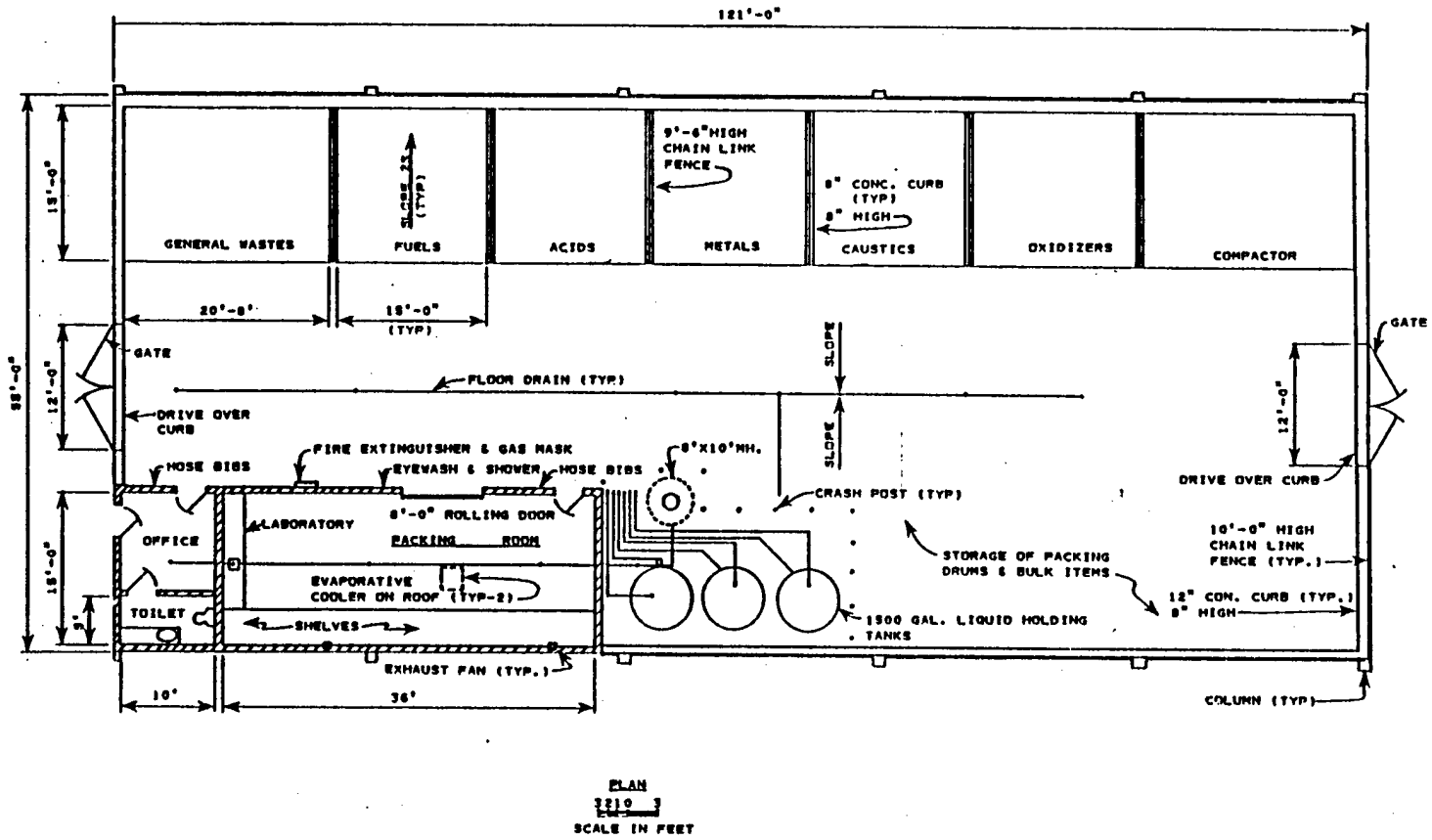

Figure 28. Detailed layout of hazardous waste storage/transfer facility.

TABLE 57

PROJECTED CAPITAL COSTS OF ON-BASE HAZARDOUS WASTE TRANSFER FACILITY*

Cost Component	Cost (1980 $)	Cost (1985 $)
Excavation & Grading	17,400	27,500
Building	522,800	825,000
Utilities	24,400	38,500
Holding Tanks & Equipment	139,400	220,000
Emergency Equipment	7,000	11,000
Total	741,000	1,122,000

* Loading/collection/transportation equipment and solid waste volume reduction facility. Capital costs are not included.

TABLE 58

PROJECTED O&M COST FOR ON-BASE STORAGE/TRANSFER FACILITY*

Cost Component	1980	1985
Labor†		
One supervisor (full time)	$20,000	$29,400
One operator (half-time)	10,000	14,700
One maintenance person (half time)	10,000	14,700
Three security persons (full time)#	60,000	88,200
One secretary (half time)	10,000	14,700
Utilities (20 hp per one-third year @ $0.06 per hp hour)	3,504	5,150
Site Maintenance (1% of capital cost)	3,215	4,720
Total O&M Cost	$116,719	$171,570

Total Annual O&M Cost Per Project Year

1985	1986	1987	1988	1989	1990	1991	1992	1993	1994	Project Total
171,600	185,300	200,000	216,000	233,300	252,000	272,100	293,900	317,400	342,800	$2,484,400

* Excluding O&M costs for collection and transfer vehicles.

† At $10/man hour; 8% annual salary increase assumed.

This function would most likely be performed by base security.

In addition to compliance with RCRA regulations, there are other advantages associated with volume reduction:

- Lower transportation costs for hauling.
- Reduced landfill volume requirements, thus prolonging landfill life.
- Possible reduced need for cover soil.

Investigations into the alternatives available for solid waste volume reduction revealed that, for the quantities and frequencies of wastes generated by the STS-VAFB ground operations, compactors would be adequate.

There are three major types of compactors in use, although variations are almost limitless due to differences in construction and options offered. These major types are horizontally actuated rams, vertically actuated rams, and horizontal extruders.

Most of these units compact the waste within detachable containers. When the container is full, the entire unit is hauled away to a disposal site. In some instances, the unit can be lifted up and emptied into a mobile compaction truck. Since the solid wastes considered in this study are hazardous, this truck would have to be dedicated to hazardous wastes.

The selection of an appropriate unit involves the consideration of many factors. There are several aspects of stationary compactors which manufacturers use to describe their machines. These include charging area size, pressure of the packer blade, cycle time, and penetration of the packing blade into the compaction container. In addition to these commonly used categories, the actual size and weight of a compactor, and the container to be used for compacting are of primary concern to the potential user.

For the purposes of managing the hazardous wastes generated by the STS ground operations, the compactor could be stationed at either of two possible locations:

- Central storage/transfer station.
- On-site Class I landfill.

Table 59 summarizes the projected capital costs for construction of a compactor system and support facilities to process the quantities of solid wastes generated by the STS-VAFB program. It can be assumed, however, that the operation and maintenance of compactor facilities is minimal, and would thus be covered under the overall costs for either the storage/transfer facility or the on-site Class I landfill (depending on compactor location).

TABLE 59

CONCEPTUAL DESIGN COMPACTOR FACILITY CAPITAL COST*

Cost Component	1980 Dollars	1985 Dollars
Compactor (2 cubic yards capacity)	8,000	12,400
Pre-Crusher (optional)	15,000	23,300
Container (6 cubic yards capacity)	1,600	2,500
Construction†	22,000	34,800
Total	46,600	73,000

* Excludes collection/transportation equipment costs.

† Includes site preparation, concrete floor slab, and installation.

7. STORAGE/TRANSFER STATION OPERATION

The next consideration in storage/transfer facility implementation is the actual operating procedure. The operation of the facility should be such that wastes are collected and stored prior to removal to treatment/recovery/disposal sites. For on-site hauling to treatment and/or disposal sites, compliance with DOT regulations is not required. However, for off-site hauling, each waste has to be properly packaged and labeled according to DOT regulation CFR, Title 49, Parts 100 to 199. Specific sections (reprinted in Appendix G) to be studied are: 171 - General Information, Regulations; 172 - General Requirements for Shipments and Packagings; and 178 - Shipping Container Specifications. An outline of federal and California state regulations for transporters and operators or owners of treatment, storage, and/or disposal facilities for hazardous wastes is given in Appendix H.

As mentioned earlier, the storage/transfer station might also serve as a single transfer point for consolidation of paperwork associated with overall hazardous waste management of the STS-VAFB program. Due to the complexity of the regulations, and the variety of internal operational and external regulatory problems that could be encountered, the large amount of paperwork and recordkeeping cannot be avoided. It would thus be advantageous to assign one qualified full-time employee to operate the base hazardous waste program.

Since liabilities for improper hazardous waste handling are extreme (up to $25,000 per day in fines and 2 years imprisonment), it is further recommended that the supervisor have a knowledge of chemistry and/or significant experience with hazardous materials, and that he be familiar with hazardous waste regulations and base policies regarding waste management.

At minimum, one half-time hazardous waste operator would also be necessary. This operator would be assigned to on-site waste management activities, such as collection, consolidation, and repackaging. If on-site treatment and disposal of certain waste prove feasible, this person could also assist in operating such systems. Furthermore, one half-time maintenance person would be required, as well as a full-time staff of three (one per shift), to provide security at all base hazardous waste facilities (this function would most likely be performed by base personnel). Additionally, approximately one half of a man-year of clerical support will be necessary.

SECTION VII

WASTE MANAGEMENT SCHEMES

1. INTRODUCTION

Alternative waste management schemes have been developed representing the most practicable combinations of the storage/treatment/disposal technologies described in Sections III through V. The schemes developed are as follows:

- Scheme 1: On-site treatment/off-site land disposal/on-site incineration (Figure 29).
- Scheme 2: On-site treatment/on-site landfilling/no incineration (Figure 30).
- Scheme 3: On-site treatment/on-site landfilling/on-site incineration (Figure 31).
- Scheme 4: On-site treatment/off-site land disposal/no incineration (Figure 32).
- Scheme 5: All wastes to off-site land disposal.
- Scheme 6: All wastes to off-site land disposal except 10c from VAFB.
- Scheme 7: All wastes to off-site land disposal except 10c from VAFB, and 9 and 15 from Port Hueneme to VAFB evaporation ponds.

The first four schemes, which involve on-site waste treatment as well as on- or off-site ultimate disposal, are discussed in greater detail below. Schemes 5, 6, and 7 are basically off-site landfilling scenarios which involve no physical-chemical treatment. These last three schemes are self-explanatory, and as such, are not included in the following discussion on scheme development. They will, however, be included in the discussion of comparative cost estimates presented later in this section.

2. DEVELOPMENT OF SCHEMES 1 THROUGH 4

Waste management Schemes 1 through 4 have been developed based on the proposed treatment and disposal operations to be performed at VAFB. In general, these operations will dictate waste management options for Port Hueneme.

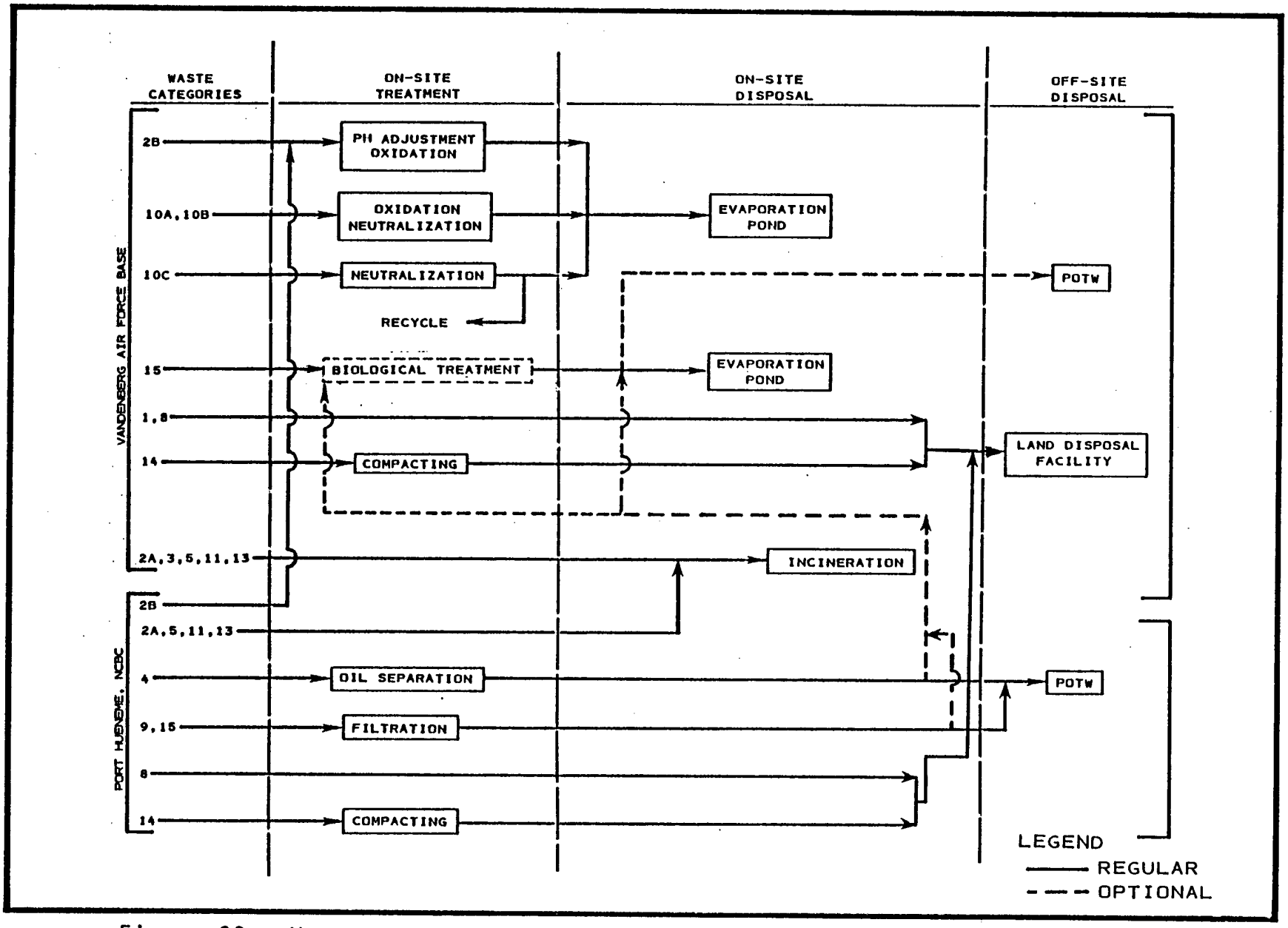

Figure 29. Waste Management Scheme 1: On-site treatment/off-site land disposal/on-site incineration.

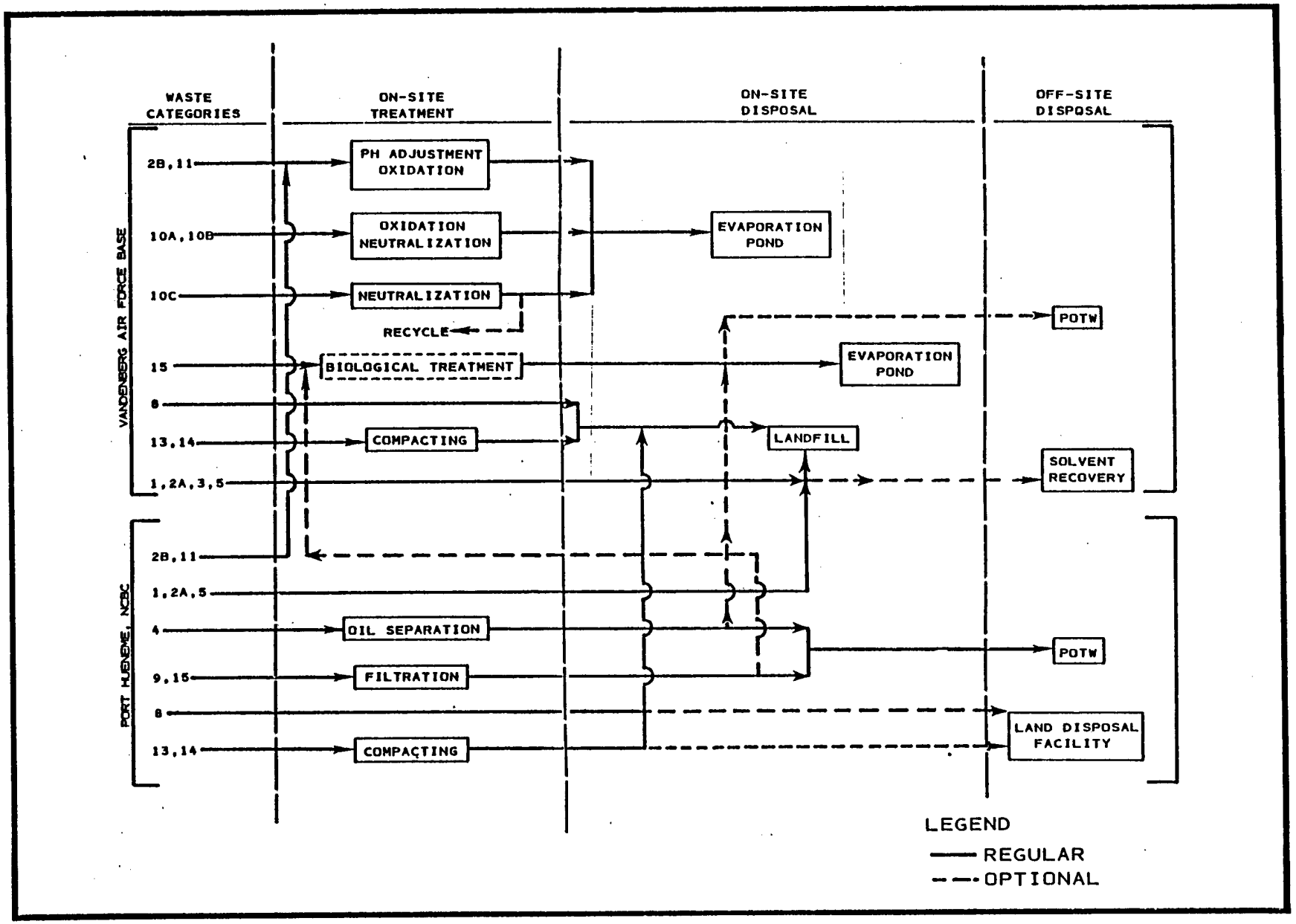

Figure 30. Waste Management Scheme 2: On-site treatment/on-site landfilling/ no incineration.

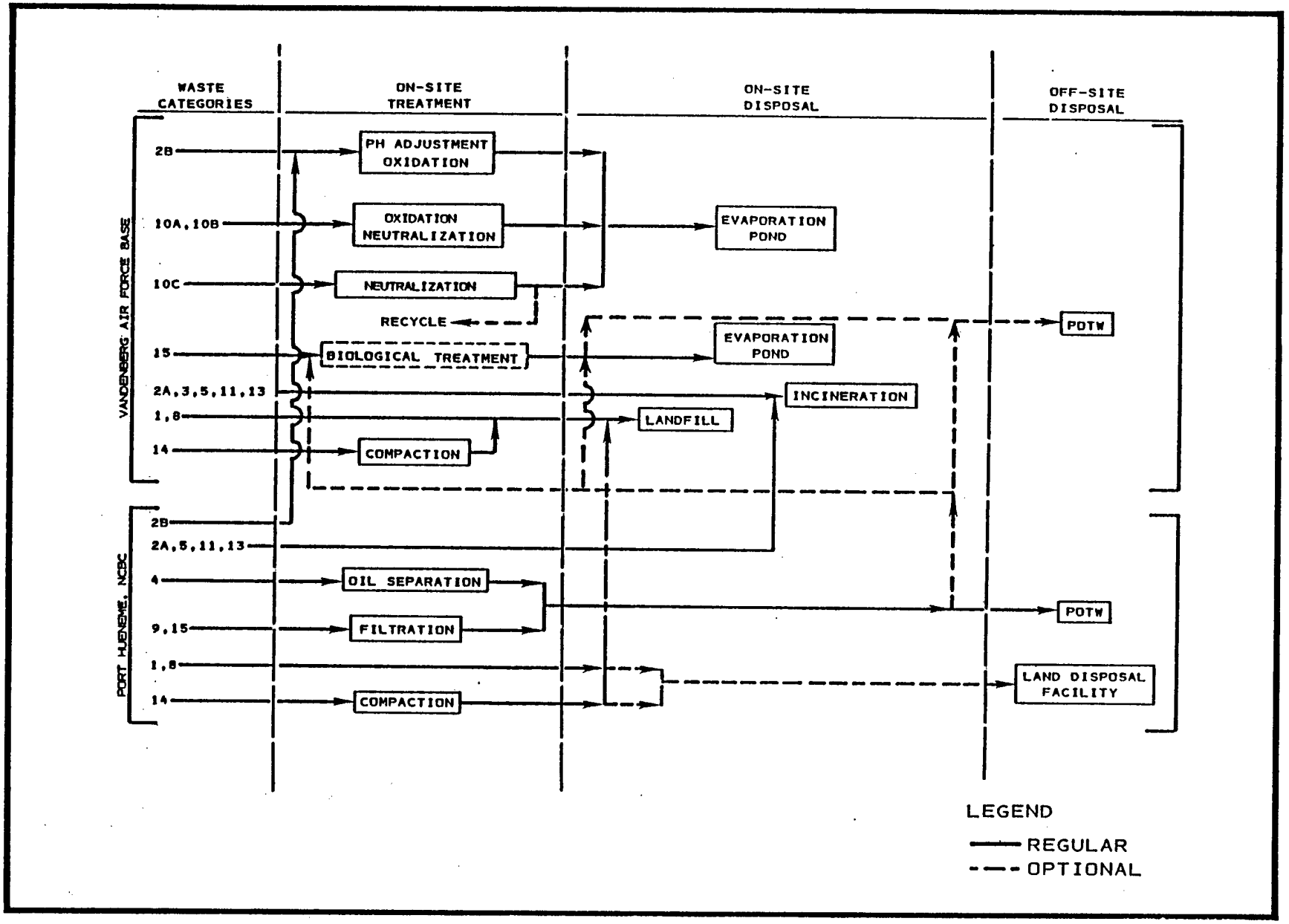

Figure 31. Waste Management Scheme 3: On-site treatment/on-site landfilling/ on-site incineration.

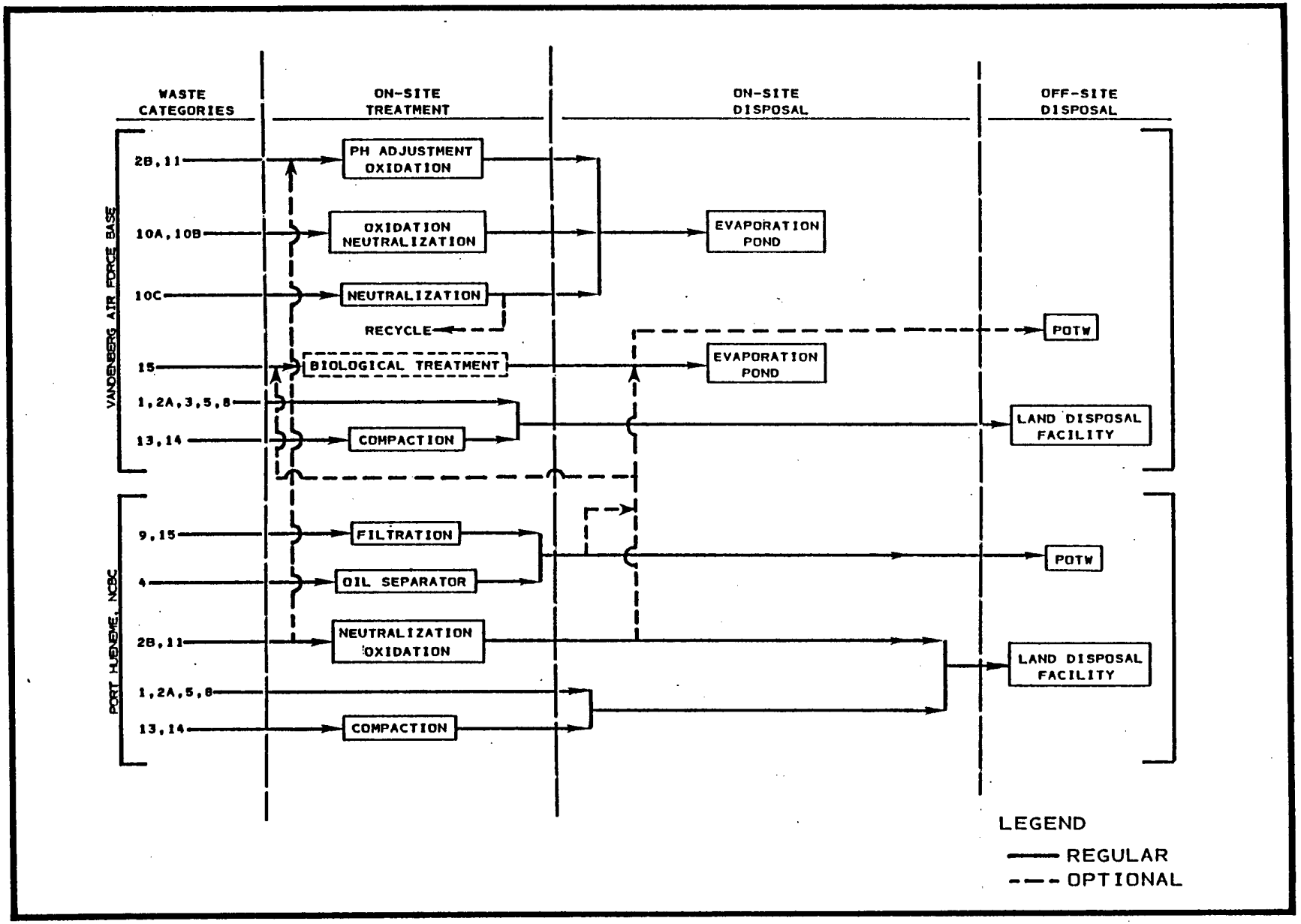

Figure 32. Waste Management Scheme 4: On-site treatment/off-site land disposal/no incineration.

For all four schemes, two on-site evaporation ponds are proposed: one at SVAFB, and the other at NVAFB. These ponds are to be used to dispose of the large volumes of effluents from physical-chemical treatment facilities, and EEW&S wastewater from industrial sumps. The evaporation ponds will eliminate the need for separate biological treatment, with the possible exception of waste Category 15. Category 15 wastes will be routed to the evaporation pond; however, due to insufficient data on its characteristics and treatment requirements, it is possible that biological treatment of this waste stream will be needed prior to its disposal to the pond. Waste Categories 2b, 10a, 10b, and 10c will undergo the appropriate physical-chemical treatments with subsequent disposal to an evaporation pond. (Though recycling has been included as an option for treated waste stream 10c, this waste stream will eventually require disposal to the evaporation pond).

Final disposal of Categories 4, 10c, and 15 wastes to coastal waters is not included as an option in this study. It should be pointed out, however, that, once data on raw waste/effluent characteristics are available, ocean disposal should be investigated. Ocean disposal would require a permit.

Waste Categories 2a, 3, 5, 11, and 13 will be subjected to thermal destruction in Schemes 1 and 3. In Schemes 2 and 4, these waste streams, with the exception of Category 11, will be disposed of by landfilling. Category 11 wastes will be treated by physical-chemical methods along with Category 2b wastes. (It should be noted that Category 11 waste is essentially the same as the waste streams in Category 2b, due to the change in the type of scrubbers used.)

In all four schemes, waste Categories 1, 8, and 14 are to be disposed of by landfilling. Category 13 (when not disposed of by incineration) and Category 14 will be compacted prior to land disposal in accordance with RCRA regulations. Volume reduction also results in considerable savings in transport and disposal costs, and prolongs the life of a disposal site. In schemes where incineration is not proposed (Schemes 2 and 4), wastes from Categories 2a, 3, and 5 will also be landfilled. It should be noted that off-site recovery of solvents contained in waste Categories 1, 2a, 3, and 5 is also a possible option.

It is expected that small quantities of residues will be generated by most of the on-site treatment/disposal options. All four waste management schemes could easily accommodate these residues, since no additional operations would be required.

For Schemes 1, 2, and 3, where VAFB would have on-site disposal facilities available, transport of wastes from Port Hueneme to VAFB is considered more economical than off-base disposal. In addition to rapidly increasing disposal rates, there is also a margin of uncertainty regarding the future availability of off-base disposal capacity.

Disposal of Port Hueneme's pretreated waste Categories 4, 9, and 15 to the Oxnard sewage system was considered a viable option, provided that these wastewaters would be accepted by the Ventura Regional County Sanitation District. In the event that these wastes could not be sewered, the most viable option was considered to be transport to VAFB's evaporation pond. However, an option for their disposal at an off-site facility was also considered. Disposal of pretreated waste Category 15 at VAFB was considered optional, but was not recommended because routing to an evaporation pond is considered a safer option.

3. COMPARATIVE COST ESTIMATES

The costs presented in this section are rough estimates, and should be used only for comparing all of the waste management schemes. Overall costs developed in this section do not include engineering and design costs or collection, transfer, and transportation equipment costs. The latter costs were excluded assuming that VAFB already owns the necessary support equipment. Estimates also assume the availability of existing unused buildings where system housing is needed, and availability of personnel protective equipment where required for hazardous waste handling.

Costs for solvent reclamation were not included since this option contains several variables. For example, the Air Force could have their waste solvents treated for reuse, in which case they would have to pay for the service. On the other hand, if the reclaimers are permitted to sell the solvents to other users, the Air Force would be paid for their waste solvents.

The costs for treating bilge wastes are excluded since additional treatment facilities may not be required. Namely, the specifications for Station Set V32 state that the Port Hueneme Navy Base will furnish industrial waste treatment facilities.

Some of the management schemes propose discharge of selected treated effluents from Port Hueneme to the local POTW. Surcharge rates for sewering industrial wastes are derived from equations which require data on such parameters as peak and average flow rates, BOD, and suspended solids (Appendix J). Most of these parameters have yet to be quantified for the STS wastes. Thus, minimum costs for sewering these wastes are included in the cost estimates. Based on the average flow rate alone, the minimum charge for sewering V32 wastes would be $500 per million gallons (FY 1985).

Tables 60, 61, 62, and 63 provide detailed cost breakdowns for management Schemes 1 through 4. Compiled capital, O&M, and total project (capital plus O&M) costs for all seven scenarios are presented in Table 64. Capital costs for Schemes 5 through 7 were taken from Table 60; O&M costs were extracted from Tables 41, 42, 46, 47, and 48 in Section V.

TABLE 60

SCHEME 1 COST ESTIMATE

Operation	1985 Capital Cost	Annual Cost 1985	1986	1987	1988	1989	1990	1991	1992	1993	1994	Total
a) Collection of waste by Military	-	2,600	2,800	3,100	3,400	3,800	4,200	4,600	5,000	5,500	6,100	41,100
b) Storage/transfer at transfer facility and overall waste management	1,122,000	171,570	185,300	200,000	216,000	233,300	252,000	272,100	293,900	317,400	342,800	3,606,400
c) pH adjustment/chemical oxidation of 2b wastes at SVAFB	69,500	5,200	8,400	15,000	24,000	25,600	27,100	28,600	30,300	31,900	33,400	299,000
d) Chemical oxidation/neutralization of 10a, 10b wastes at SVAFB	94,400	34,100	55,400	99,000	159,200	169,900	179,800	189,800	200,500	211,200	221,100	1,614,400
e) Neutralize quench water (10c) in place in flame buckets	153,300	4,200	6,800	12,100	19,400	20,700	21,900	23,100	24,400	25,700	26,900	338,500
f) Evaporation pond for treated 2b,10a,10b, 10c; SVAFB*	7,552,400	34,100	36,400	40,100	44,100	48,500	53,300	58,600	64,500	71,000	78,000	8,081,000
g) Evaporation pond at NVAFB for VAFB 15 wastes	316,000	13,900	15,300	16,800	18,500	20,300	22,400	24,600	27,100	29,800	32,800	537,500
h) VAFB 14 wastes compacted	73,000	-	-	-	-	-	-	-	-	-	-	73,000

TABLE 60 (continued)

Operation	1985 Capital Cost	Annual Cost 1985	1986	1987	1988	1989	1990	1991	1992	1993	1994	Total
i) VAFB 1,8,14 wastes and Port Hueneme 1,8,14 wastes land disposal off-site	-	3,500	5,700	10,400	17,200	18,900	20,700	22,800	25,000	27,500	30,200	181,900
j) Port Hueneme waste 4 (bilge water) to oil separator for discharge to POTW†	-	-	-	-	-	-	-	-	-	-	-	-
k) Filter 9,15 wastes at Port Hueneme for discharge to POTW	599,000	3,600	5,800	10,300	16,600	17,700	18,800	19,800	20,900	22,000	23,000	757,500
l) Discharge 9, 15 wastes at Port Hueneme to POTW**	-	200	400	700	1,200	1,300	1,400	1,600	1,700	1,900	2,100	12,500
m) Compact Port Hueneme 14 wastes	73,000	-	-	-	-	-	-	-	-	-	-	73,000
n) Transport Port Hueneme wastes 1,2a,2b,5,8,11, 13,14 to VAFB	-	1,000	1,600	2,900	4,800	5,200	5,700	6,200	6,700	7,300	8,000	49,400
o) Incinerate all 2a,3,5, 11,13 wastes on site	9,460,000	4,000	6,000	11,000	18,000	20,000	21,000	23,000	25,000	28,000	30,000	9,646,000
Total	19,512,600	278,000	329,900	421,400	542,400	585,200	628,300	674,800	725,000	779,200	834,400	25,311,200

* For calculations see Appendix J.

† No cost estimates for treatment or discharge can be made due to lack of quantitative data.

** Minimum changes based on average flow rate alone.

TABLE 61

SCHEME 2 COST ESTIMATE

Operation	1985 Capital Cost	Annual Cost 1985	1986	1987	1988	1989	1990	1991	1992	1993	1994	Total
a) Collection of wastes by Military	-	2,600	2,800	3,100	3,400	3,800	4,200	4,600	5,000	5,500	6,100	41,100
b) Storage/transfer at transfer facility and overall waste management pH adjustment	1,122,000	171,570	185,300	200,000	216,000	233,300	252,000	272,100	293,900	317,400	342,800	3,606,400
c) Chemical oxidation treatment of 2b,11 wastes at SVAFB	89,400	11,500	18,600	33,300	53,600	57,200	60,500	63,800	67,400	71,000	74,400	600,700
d) Chemical oxidation/ neutralization treatment of 10a,10b waste at SVAFB	94,400	34,100	55,400	99,000	159,200	169,800	179,800	189,800	200,500	211,200	221,100	1,614,400
e) Neutralize quench water in-place in flame buckets	153,300	4,200	6,800	12,100	19,400	20,700	21,900	23,100	24,400	25,700	26,900	338,500
f) Evaporation pond for treated 2b,10a,10b,10c, 11 wastes; SVAFB*	7,552,400	34,100	36,400	40,100	44,100	48,500	53,300	58,600	64,500	71,000	78,000	8,081,000
g) Evaporation pond at NVAFB for VAFB 15 wastes	316,000	13,900	15,300	16,800	18,500	20,300	22,400	24,600	27,100	29,800	32,800	537,500

TABLE 61 (continued)

Operation	1985 Capital Cost	Annual Cost 1985	1986	1987	1988	1989	1990	1991	1992	1993	1994	Total
h) VAFB 13,14 wastes compacted	73,000	-	-	-	-	-	-	-	-	-	-	73,000
i) 1,2a,3,5,8,13,14 waste landfilled on-site	751,800	39,100	42,300	45,400	48,600	51,900	54,900	58,000	61,200	64,500	67,500	1,285,200
j) Port Hueneme waste 4 (bilge water) to oil separator for discharge to POTW†	-	-	-	-	-	-	-	-	-	-	-	-
k) Filter 9,15 wastes at Port Hueneme for discharge to POTW	599,000	3,600	5,800	10,300	16,600	17,700	18,800	19,800	20,900	22,000	23,100	757,500
l) Discharge 9, 15 wastes at Port Hueneme to POTW**	-	200	400	700	1,200	1,300	1,400	1,600	1,700	1,900	2,100	12,500
m) Compact Port Hueneme wastes 13,14	73,000	-	-	-	-	-	-	-	-	-	-	73,000
n) Transport Port Hueneme wastes 1,2a,2b,5,8,11, 13,14 (compacted) to VAFB	-	1,000	1,600	2,900	4,800	5,200	5,700	6,200	6,700	7,300	8,000	49,400
o) Landfill Port Hueneme's wastes at VAFB (on-site)	-	-	-	-	-	-	-	-	-	-	-	-
Total	10,824,300	315,800	370,800	463,700	585,400	629,700	674,900	722,100	773,400	827,400	882,800	17,070,300

* For calculations see Appendix J.

† No cost estimates for treatment or discharge can be made due to lack of quantitative data.

** Minimum charges based on average flow rate alone.

TABLE 62

SCHEME 3 COST ESTIMATE

Operation	1985 Capital Cost	Annual Costs 1985	1986	1987	1988	1989	1990	1991	1992	1993	1994	Total
a) Collection of wastes by Military	-	2,600	2,800	3,100	3,400	3,800	4,200	4,600	5,000	5,500	6,100	41,100
b) Storage/transfer at transfer facility and overall waste management	1,122,000	171,570	185,300	200,000	216,000	233,300	252,000	272,100	293,900	317,400	342,800	3,606,400
c) pH adjustment/chemical oxidation of 2b wastes at SVAFB	69,500	5,200	8,400	15,000	24,000	25,600	27,100	28,600	30,300	31,900	33,400	299,000
d) Chemical oxidation/ neutralization of 10a, 10b wastes at SVAFB	94,400	34,100	55,400	99,000	159,200	169,900	179,800	189,800	200,500	211,200	221,100	1,614,400
e) Neutralize quench water (10c) in-place in flame buckets	153,300	4,200	6,800	12,100	19,400	20,700	21,900	23,100	24,400	25,700	26,900	338,500
f) Evaporation pond for treated 2b,10a,10b, 10c; SVAFB	7,552,400	34,100	36,400	40,100	44,100	48,500	53,300	58,600	64,500	71,000	78,000	8,081,000
g) Evaporation pond at NVAFB for VAFB 15 wastes	316,000	13,900	15,300	16,800	18,500	20,300	22,400	24,600	27,100	29,800	32,800	537,500
h) VAFB 14 wastes compacted	73,000	-	-	-	-	-	-	-	-	-	-	73,000
i) VAFB 1,8,and 14 wastes landfilled on-site	751,800	39,100	42,300	45,400	48,600	51,900	54,900	58,000	61,200	64,500	67,500	1,285,200

TABLE 62 (continued)

Operation	1985 Capital Cost	Annual Costs 1985	1986	1987	1988	1989	1990	1991	1992	1993	1994	Total
j) Port Hueneme waste 4 (bilge water) to oil separator for discharge to POTW†	-	-	-	-	-	-	-	-	-	-	-	-
k) Filter 9,15 wastes at Port Hueneme for discharge to POTW	599,000	3,600	5,800	10,300	16,600	17,700	18,800	19,800	20,900	22,000	23,100	757,500
l) Discharge 9, 15 wastes at Port Hueneme to POTW**	-	200	400	700	1,200	1,300	1,400	1,600	1,700	1,900	2,100	12,500
m) Compact Port Hueneme 14 wastes	73,000	-	-	-	-	-	-	-	-	-	-	73,000
n) Transport Port Hueneme 1,2a,2b,5,8,11,13, to VAFB	-	1,000	1,600	2,900	4,800	5,200	5,700	6,200	6,700	7,300	8,000	49,400
o) Incinerate all 2a,3,5, 11,13 wastes on-site	9,460,000	4,000	6,000	11,000	18,000	20,000	21,000	23,000	25,000	28,000	30,000	9,646,000
p) Port Hueneme 1,8,14 wastes landfilled at VAFB (on-site)	-	-	-	-	-	-	-	-	-	-	-	-
Total	20,264,400	313,500	366,600	456,400	573,800	618,200	662,500	709,900	761,300	816,300	871,800	26,414,600

* For calculations see Appendix J.

† No cost estimates for treatment or discharge can be made due to lack of quantitative data.

** Minimum charges based on average flow rate alone.

TABLE 63

SCHEME 4 COST ESTIMATE

Operation	1985 Capital Cost	Annual Cost 1985	1986	1987	1988	1989	1990	1991	1992	1993	1994	Total
a) Collection of wastes by Military	-	2,600	2,800	3,100	3,400	3,800	4,200	4,600	5,000	5,500	6,100	41,100
b) Storage/transfer at transfer facility and overall waste management	1,122,000	171,570	185,300	200,000	216,000	233,300	252,000	272,100	293,900	317,400	342,800	3,606,400
c) pH adjustment/chemical oxidation treatment of 2b,11 wastes at SVAFB	89,400	11,500	18,600	33,300	53,600	57,200	60,500	63,800	67,400	71,000	74,400	600,700
d) Chemical oxidation/ neutralization treatment of 10a,10b wastes at SVAFB	94,400	34,100	55,400	99,000	159,200	169,800	179,800	189,800	200,500	211,200	221,100	1,614,400
e) Neutralize quench water (10c) in place in flame bucket	153,300	4,200	6,800	12,100	19,400	20,700	21,900	23,100	24,400	25,700	26,900	338,500
f) Evaporation pond for treated 2b,10a, 10b,10c,11 wastes; SVAFB*	7,552,400	34,100	36,400	40,100	44,100	48,500	53,300	58,600	64,500	71,000	78,000	8,081,000
g) Evaporation pond at NVAFB for VAFB 15 waste	316,000	13,900	15,300	16,800	18,500	20,300	22,400	24,600	27,100	29,800	32,800	537,500

TABLE 63 (continued)

Operation	1985 Capital Cost	Annual Cost 1985	1986	1987	1988	1989	1990	1991	1992	1993	1994	Total
h) Compact VAFB 13,14 wastes	73,000	-	-	-	-	-	-	-	-	-	-	73,000
i) VAFB 1,2a,3,5,8,13, 14 (compacted) wastes land disposal off site	-	40,800	67,200	123,100	203,000	223,000	245,000	269,100	295,600	324,600	356,500	2,147,900
j) Port Hueneme waste 4 (bilge water) to oil separator for discharge to POTW†	-	-	-	-	-	-	-	-	-	-	-	-
k) Filter 9,15 waste at Port Hueneme for discharge to POTW	599,000	3,600	5,800	10,300	16,600	17,700	18,800	19,800	20,900	22,000	23,100	757,500
l) Discharge 9, 15 wastes at Port Hueneme to POTW**	-	200	400	700	1,200	1,300	1,400	1,600	1,700	1,900	2,100	12,500
m) Compact Port Hueneme wastes 13,14	73,000	-	-	-	-	-	-	-	-	-	-	73,000
n) Off-site land disposal of Port Hueneme wastes 1,2a,2b,5,8,11, 13,14 (compacted)	-	6,200	10,200	18,600	30,700	33,700	37,100	40,700	44,700	49,100	53,900	324,900
Total	10,072,500	322,800	404,200	557,100	765,700	829,300	896,400	967,800	1,045,700	1,129,200	1,217,700	18,208,400

* For calculations, see Appendix J.

† No cost estimates for treatment or discharge can be made due to lack of quantitative data.

** Minimum charges based on average flow rate alone.

TABLE 64

COST ESTIMATES FOR STS HAZARDOUS WASTE MANAGEMENT SCHEMES
(VAFB AND Port Hueneme)*

Scheme	Description	Capital Costs 1985 $	O&M Costs, $ 1985-1994	Total Project Cost, $
1	On-site treatment/off-site land disposal/on-site incineration	$19,512,600	5,798,600	25,311,200
2	On-site treatment/on-site landfilling/no incineration	10,824,300	6,246,020	17,070,300
3	On-site treatment/on-site landfilling/on-site incineration	20,264,400	6,150,200	26,414,600
4	On-site treatment/off-site land disposal/no incineration	10,092,500	8,115,900	18,208,400
5	All wastes to off-site land disposal	1,268,000	15,851,100	17,119,100
6	All waste to off-site land disposal except 10c wastes from VAFB	8,820,400	9,069,600	17,890,000
7	All wastes to off-site land disposal except 10c waste from VAFB; 9 and 15 wastes from Port Hueneme to VAFB evaporation pond.	9,136,400	7,601,200	16,737,600

* Includes capital costs in 1985 dollars. All other costs escalated for the 1985 through 1994 period.

4. DISCUSSION

The seven schemes presented represent three basic waste management configurations:

- Treatment/incineration/on- and off-site landfilling (Schemes 1 and 3).
- Treatment/no incineration/on- and off-site landfilling (Schemes 2 and 4).
- No treatment/no incineration/off-site landfilling (Schemes 5, 6, and 7).

The total project costs are similar for all schemes that do not employ incineration; these costs are in the proximity of $17 million (Table 64). Costs for incineration scenarios, however, are approximately 65 percent higher, approaching $26 million. The significant factor in these overall costs is the capital cost associated with the incinerators.

It should be noted that all capital costs were developed based on the best available technologies/materials; however, less expensive technologies/materials may be available. For example, capital costs for schemes proposing evaporation ponds could be reduced as much as $3 million by substituting less costly PVC lines for hypalon liners. An additional cost reduction of $4 million could be realized if pond surface areas were reduced for the same pond volumes. In this case, however, the evaporation rate would be significantly reduced, and the pond would essentially become a surface impoundment.

Capital costs in Schemes 2, 4, 5, 6, and 7 are primarily attributable to the construction of evaporation ponds. However, there is essentially no variation in the total project costs regardless of whether the wastes are routed to evaporation ponds or exclusively to an off-base land disposal facility. Furthermore, although Scheme 5 exhibits the lowest capital costs, total project costs for this scheme amount to $17 million, which is in the same range as all of the non-incineration scenarios. Since these costs are mainly a function of Class I landfill availability, they are less predictable than the costs associated with the other schemes. A comparison of Schemes 1, 4, 5, 6, and 7 total project costs for transportation and disposal of STS hazardous waste to alternative Class I disposal facilities is given in Table 65. Furthermore, closure of any Class I landfill would increase waste input to other landfills and shorten their life spans, thus increasing the rates charged for disposal.

Capital costs presented in Table 64 are expressed in 1985 dollars. Completion of the waste management facilities prior to 1985 would lower the stated capital costs. Another factor to consider is the ongoing construction at most VAFB station set

TABLE 65

COMPARISON OF TOTAL PROJECT COSTS FOR TRANSPORTATION AND DISPOSAL TO ALTERNATIVE CLASS I LAND DISPOSAL FACILITIES

	All Wastes to Casmalia	VAFB Wastes to Kettleman; PH Wastes to West Covina*			All Wastes to Kettleman		
Scheme	Total Project Cost ($)	Total Project Cost($)	Cost Over Casmalia ($)	Increase in Cost (%)	Total Project Cost ($)	Cost Over Casmalia ($)	Increase in Cost (%)
1	181,900	--†	--	--	249,500	67,600	37
4	2,472,800	3,993,600	1,520,800	61	3,844,600	1,371,800	55
5	13,647,100	19,223,300	5,576,200	41	20,327,400	6,680,300	49
6	8,822,400	12,058,600	3,236,200	37	13,162,700	4,340,300	49
7	3,973,600	5,570,600	1,597,000	40	5,465,300	1,491,700	38

* West Covina disposal costs assume that all wastes are drummed except IW, SB, and SI wastes which are disposed of in bulk. Costs will decrease if other Port Hueneme wastes are also disposed of in bulk.

† For Scheme 1, the quantities of waste at Port Hueneme are too small to merit separate disposal.

facilities. Construction costs could be decreased by using equipment and personnel already on hand, rather than bringing in contractors at a later date.

It should be noted that there is uncertainty about the chemical characteristics of some wastes generated by the STS-VAFB ground operations. Monitoring for STS waste streams at KSC is recommended, along with laboratory treatability studies prior to any final decision on alternatives for waste management. Those treatment schemes that appear most feasible should then be investigated in more detail, and their cost estimates refined accordingly. The advantages and disadvantages of each waste management scheme can then be more accurately compared, and final decisions made.

GLOSSARY

APS	Aft propulsion system
APU	Auxiliary power unit
ARCS	Aft reaction control subsystem
AUX	Auxiliary
BLDG	Building
BLDUP	Buildup
BSM	Booster separation motor
C	Corrosive
C/O	Checkout
CAC	California Administrative Code
CCMS	Checkout, control, and monitor subsystem
CFM	Cubic feet per minute
CHTS	Parachutes
CMPNTS	Components
CNTCY	Contingency
CNTR	Container
CO_2	Carbon dioxide
CPR	CPR-421 spray-on foam
CPU	Central Processing Unit
DOD	Department of Defense
DOT	Department of Transportation
DSERV	Deservice/deservicing
E	EP toxic
ECLSS	Environmental control and life support system
EEW&S	Emergency eyewash and shower
EIS	Environmental Impact Statement
ENG	Engine
EPA	Environmental Protection Agency
EQUIP	Equipment
ET	External tank
ETA	External tank attach
F	Fahrenheit
F	Flammable

FAC	Facility
FC	Fuel cell
FCAF	Flight crew accommodations facility
FCEF	Flight crew equipment facility
FCP	Fuel cell power plant
FCS	Flight crew systems
FCSS	Fuel cell servicing system
FDS	Facility design specification
FRCS	Forward reaction control system
FSM	Fuel supply module
FUSLG	Fuselage
FWD	Forward
GH_2	Gaseous hydrogen
GHe	Gaseous helium
GN_2	Gaseous nitrogen
GNC	Guidance navigation and control
GO_2	Gaseous oxygen
GPM	Gallons per minute
GSS	Ground support system
H	EPA acutely hazardous
H_2O	Water
HDWE	Hardware
He	Helium
HEPA	High efficiency particulate air
HIM	Hardware interface module
HMC	Hypergolic maintenance and checkout
HMCF	Hypergolic maintenance and checkout facility
HPU	Hydraulic power unit
HS	Hypergol service
HSF	Hypergolic service facility
HVAC	Heating, ventilating, and air conditioning
HYD	Hydrazine
HZ	Hertz

GLOSSARY (continued)

i	Ignitable
I	Irritant
INSP	Inspection
INSTL	Install
JSC	Johnson Space Center
KSC	Kennedy Space Center
KV	Kilovolts
KVA	Kilovolt-ampere
KW	Kilowatt
LAPS	Left aft propulsion system
LBM	Liquid boost module
LCC	Launch control complex
LH_2	Liquid hydrogen
LIQ	Liquid
LMIS	Logistics management information system
LN_2	Liquid nitrogen
LO_2	Liquid oxygen
LOCC	Launch Operations Control Center
LPG	Liquid petroleum gas
LP	Launch pad
LRU	Line replaceable unit
LSA	Logistics support analysis
MAF	Michoud assembly facility
MDA	Methylene dianiline
MDI	Diphenyl methane diisocyanate
MECl	Methylene chloride
MF	Maintenance facility
MMH	Monomethylhydrazine
MPS	Main propulsion subsystem
MSE	Maintenance support equipment
MST	Mobile service tower
N/A	Not applicable
N_2	Nitrogen

N_2H_4	Anhydrous hydrazine
N_2O_4	Nitrogen tetroxide
NASA	National Aeronautics and Space Administration
ND	No data
NDI	Nondestructive inspection
NFPA	National Fire Protection Association
NH_3	Ammonia
NP	Nozzle plug
NVAFB	North Vandenberg Air Force Base
O_2	Oxygen
OMCF	Orbiter maintenance and checkout facility
OMS	Orbiter maneuvering system
OPNS	Operations
ORB	Orbiter
OSHA	Occupational Safety and Health Administration
OXID	Oxidizer
P	Pressure generating
P&S	Pack and ship
P/L	Payload
PBK	Payload bay kit
PCR	Payload changeout room
PERC	Perchloroethylene
PGHM	Payload ground handling mechanism
PLA	Parachute location aid
PLB	Payload bay
POCC	Payload operations control center
PPM	Part per million
PPR	Payload preparation room
PRF	Parachute refurbishment facility
PRG	Purge
PRSD	Power reactant storage and distribution
PSI	Pounds per square inch
PSIG	Pounds per square inch gauge

GLOSSARY (continued)

PV&D	Purge, vent, and drain
PVC	Polyvinylchloride
R	Reactive
RAPS	Right aft propulsion system
RCRA	Resource Conservation and Recovery Act
RCS	Reaction control subsystem
REFURB	Refurbish or refurbishment
RPR	Repair
RSS	Range safety system
RV	Retrieval vessel
S	Strong sensitizer
S&A	Safe and arm
SAMSO	Space and Missile Systems Organization
SCA	Shuttle carrier aircraft
SCAPE	Self-contained atmospheric protective ensemble
SDAF	SRB or SRM disassembly facility
SDB	Shallow draft barge
SDF	Safing and deservicing facility
SE	Support equipment
SLC	Space launch complex
SOFI	Spray-on foam insulation
SRB	Solid rocket booster
SRM	Solid rocket motor
SRSF	SRB refurbishment and subassembly facility
SS	Station set
SSME	Space shuttle main engine
SSS	Station set specification
SSV	Space shuttle vehicle
STAT	Station
STS	Space transportation system
SVAFB	South Vandenberg Air Force Base
T	Toxic
T-0	Time Zero

GLOSSARY (continued)

TBD	To Be Determined
TCF	Tank Checkout Facility
TPS	Thermal Protection System
TRIC	1,1,1-trichloroethane
TRIK	Trickle
TVC	Thrust vector control
UDMH	Unsymmetrical dimethylhydrazine
VAFB	Vandenberg Air Force Base
VLPS	Vandenberg launch processing system
WCS	Waste collector subsystem
XFER	Transfer
XPRT	Transport

BIBLIOGRAPHY

Audrieth, L. F., and B. A. Ogg. The Chemistry of Hydrazine. Wiley, New York, 1951.

Banerjee, S., H. C. Sikka, and R. Gray. Environmental degradation of 1,1-dimethyl-hydrazine. In: Proceedings of the Conference on Environmental Chemistry of Hydrazine Fuels, Tyndall Air Force Base, 13 September 1977. CEEDO-TR-78-14, Civil and Environmental Engineering Development Office, Tyndall Air Force Base, Florida, March 1978. p. 113.

Bansfield, C. J. Personal communication to D. C. Elias, August 5, 1980.

Bowman, T. E. Hypergolic propellants liquid and vapor disposal, Phase 4. Florida Institute of Technology for National Aeronautics and Space Administration, Kennedy Space Center, Florida, 1975.

California State Department of Health Services Hazardous Material Management Section. Instructions for Preparing an Operation Plan for a Hazardous Waste Facility. Sacramento, 1978.

Cole, R. C., R. A. Gardner, K. D. Cowans, E. L. Begg, G. L. Huntington, and L. C. Leifer. Soil Survey of the Santa Barbara Area, California. Series 1944, No. 8, U.S. Department of Agriculture Soil Conservation Service with University of California Agricultural Experiment Station, Washington, D.C., March 1958.

Dibblee, T. W., Jr. Geology of Southwestern Santa Barbara County, California: Point Arguello, Lompoc, Point Conception, Los Olivos, and Gaviota Quadrangles. Bulletin 150, California Division of Mines, Sacramento, 1950.

Edwards, J. Personal communication to J. R. Marsh, November 14, 1980.

Evenson, R. E. Suitability of Irrigation Water and Changes in Ground Water Quality in the Lompoc Subarea of the Santa Ynez River Basin, Santa Barbara County, California. Water-Supply Paper 1809-S, U.S. Geological Survey, Washington, D.C., 1965.

Evenson, R. E., and G. A. Miller. Geology and Ground-Water Features of Point Arguello Naval Missile Facility, Santa Barbara County, California. Water-Supply Paper 1619-F, U.S. Geological Survey, Washington, D.C., 1963.

MacNaughton, M. G., J. A. Farmwald, L. McDaniels, and G. Urda. Biological Degradation of Hydrazine. CEEDO-TR-78-13, Civil and Environmental Engineering Development Office, Environmental Sciences Branch, Tyndall Air Force Base, Florida, 1978.

MacNaughton, M. G., G. A. Urda, and S. E. Bowen. Oxidation of Hydrazine in Aqueous Solutions. CEEDO-TR-78-11, Civil and Environmental Engineering Development Office, Tyndall Air Force Base, Florida, 1978.

Miller, G. A. Ground-Water Resources in the Lompoc Area, Santa Barbara County, California. Open-File Report 76-183, U.S. Geological Survey Water Resources Division, Menlo Park, California, 1976.

Ralph M. Parsons Company. TOR005: Environmental Permit Requirements. Pasadena, California, December 1978.

Russell & Axon. Chemical Waste Disposal Facilities Preliminary Engineering Report (PCN 77851), Daytona Beach, Florida, 1977.

Shipman, G. E., C. J. Hilliker, L. C. Leifer, and R. C. Carman. Soil Survey of the Northern Santa Barbara Area. U.S. Department of Agriculture Soil Conservation Service, Washington, D.C., 1972.

Sierka, R. A., and W. F. Cowen. The Ozone Oxidation of Hydrazine Fuels. CEEDO-TR-78-43, Civil and Environmental Engineering Development Office, Tyndall Air Force Base, Florida, 1978.

Stauffer, T. B., and A. W. Eyl. Studies on Evaporation of Hydrazine and Procedures for Cleanup of Small Spills. CEEDO-TR-78-12, Civil and Environmental Engineering Development Office, Tyndall Air Force Base, Florida, 1978.

U.S. Department of the Interior, Bureau of Reclamation. Soils Manual for Design of Asphalt Pavement Structures. Manual Series No. 10, Denver, 1969.

U.S. Naval Environmental Support Office. Hazardous Waste Disposal Guide. Port Hueneme, California, 1976.

Vandenberg Air Force Base. Abbreviated Master Plan, Vandenberg Air Force Base. Lompoc, California, 1978.

Wilson, H. D., Jr. Ground-Water Appraisal of Santa Ynez River Basin, Santa Barbara, California, 1945-52. Water-Supply Paper 1467, U.S. Geological Survey, Washington, D.C., 1959.

Zirrolli, J. A., B. A. Braun, T. B. Stauffer, D. A. Stone, and M. G. MacNaughton. Environmental Chemistry of Hydrazine Fuels. Air Force Engineering and Services Center, Tyndall Air Force Base, Florida. Presented at the 1980 JANNAF Safety and Environmental Specialist Session, March 12, 1980, Monterey, California. CPIA Publication 313, April 1980.